PERFORMANCE TESTING
February 2011

As Defined By
30 TAC §117.435(f) and Standard Permit for Electric Generating Units Recertification

RMCEINC Project #2011-15029

WASTE MANAGEMENT OF TEXAS, INC.
SKYLINE RDF
FERRIS, TEXAS

THREE (3) CATERPILLAR 3520 INTERNAL COMBUSTION ENGINES

(EPN: ENG01, ENG02 & ENG 04)

PREPARED FOR:
WASTE MANAGEMENT OF TEXAS, INC.
Waste Management Renewable Energy

BY:

RMC ENVIRONMENTAL, INC. – CHICAGO REGIONAL OFFICE

REPORT CERTIFICATION

The sampling, analysis, and data collection performed for this report were carried out under my direction and supervision, and I hereby certify that the test report is authentic and accurate, to the best of my knowledge.

Date _____ Signature _____

Rachel Chleborowicz, QSTI
Project Manager
RMC ENVIRONMENTAL, INC.

TABLE OF CONTENTS

1.0 PROJECT INFORMATION 1

1.1 COMPANY INFORMATION 1
1.2 TESTING FIRM INFORMATION 1
1.3 TEST INFORMATION 1

2.0 SOURCE IDENTIFICATION 1

2.1 FACILITY DESCRIPTION, PROCESS INFORMATION, AND EMISSION SOURCE DESCRIPTION 2

3.0 SUMMARY AND DISCUSSION OF RESULTS 2

4.0 POLLUTANTS AND TEST METHODS 3

5.0 TEST PROCEDURES AND RESULTS 3

5.10 SAMPLING PROCEDURES 3
5.11 VOLUMETRIC FLOW RATES 3
5.12 INSTRUMENTAL TEST EQUIPMENT AND PROCEDURES 6
5.13 INSTRUMENTAL ANALYTICAL DATA 7

6.0 EQUIPMENT CALIBRATION AND QUALITY ASSURANCE 7

APPENDIX A. TEST SUMMARY SHEETS ..... A

Emissions Summary

APPENDIX B. FIELD TEST DATA W/ INSTRUMENTAL TEST DATA ..... B

Method 1-4 Field Data
Flow Rate Determinations
Calibration Summaries
Instrumental Test Run Data

APPENDIX C. TEST QA/ QC FORMS C

Calibration Gas Certificates of Analysis
Meterbox Calibrations

APPENDIX D. PROCESS DATA ..... D

APPENDIX E. RESUMES OF TEST PERSONNEL ..... E

1.0 PROJECT INFORMATION

1.1 Company Information

Name and Address:	WM Renewable Energy, LLC. Skyline RDF 1201 North Central Ave Ferris, Texas 75125
Contact:	Victor Saufley
Telephone Number:	713-328-7348
Permit Number:	Title V Permit #O-01485; Standard Air Permit for Plant 78639
Source Tested:	Three IC Engines (FIN: ENG01, ENG02 & ENG04) – Landfill Gas Treatment / Electric Generating Plant

1.2 Testing Firm Information

Name and Address:	RMC ENVIRONMENTAL, INC. 9226 North 2nd Street Machesney Park, Illinois 61115
Contact:	Rachel Chleborowicz
Telephone Number:	815-378-6150 Mobile 800-532-3391 Office RMCE@AirMonitoring.com / RMCEInc@aol.com

1.3 Test Information

Test Requested By:	WM Renewable Energy, LLC.	
Source Contact:	Mr. Dan Cotton	
Telephone Number:	501-804-9592	
Test Objective:	Compliance and Performance Testing, Standard Permit for Electric Generating Units Recertification & 30 TAC §117.440(h).	
Test Methods:	EPA Methods 1-4, 3A, 7E and 10	
Test Dates:	February 24th and 25th, 2011	
EPA / State Representatives On-site:		
Source Test Coordinators:	Mr. Dan Cotton	Waste Management, Inc.
Test Personnel:	Rachel Chleborowicz Andrew McDermand	RMCEInc RMCEInc
Laboratory Analysis:	Core Laboratories, Inc. – Houston, Texas	

2.0 SOURCE IDENTIFICATION

Name and Address:	WM Renewable Energy, LLC. Skyline RDF 1201 North Central Ave Ferris, Texas 75125
Contact:	Mr. Danny Cotton

Telephone Number:	501-804-9592
Air Quality Permit #:	Title V Permit #O-01485; Standard Air Permit for Plant 78639
Source Tested:	Three (3) IC Engines (Engines No.1, 2, & 4) – Landfill Gas Treatment / Electric Generating Plant
Fuel:	Landfill Gas
Sampling Location Dimensions:	Height 12' ID ~ 16"
Sampling Location:	~ 60" Downstream and ~ 48" Upstream from any flow disturbance

- Senior Project Manager works directly with the site coordinator and the facility's operators during the testing to coordinate the testing. They are also responsible for operating and monitoring the instrumental test methods within the mobile test laboratory.
- Project Manager conducts, manages and/or supervises the wet test methods conducted at the sample location.
- The Site Coordinator is the facility's representative for the test program.

The individuals listed above account for nearly 35 years of accumulative experience in the stack testing industry. Their experience expands nearly every state in the United States. It also includes most source categories such as aerospace facilities, waste incinerators, hazardous waste incinerators, trash incinerators, medical waste incinerators, crematories, cement kilns, paper mills, steel mills, combined cycle power plants, simple cycle power plants, coal fired power plants, easte-to-energy facilities, natural gas compressor stations, diesel engines, ethanol plants, petro-chemical facilities and oil refineries.

2.1 Facility Description, Process Information, and Emission Source Description

The Skyline RDF Faciltiy consists of a municipal solid waste landfill and associated support systems and structures. Landfill gas is collected and then combusted by four (4) landfill gas-fired (LFG) Caterpillar 3520 engines/electric generator sets and a flare system. The landfill gas extraction system consists of gas extraction wells, which are spaced across the surface of the landfill. The wells are interconnected by a subsurface manifold system, which traverses the landfill. Each landfill gas extraction well is outfitted with a valve allowing the flow of gas to be individually controlled. The landfill gas collection system is equipped with centrifugal blowers, which feed the candlestick flares. In addition, the engine generators receive landfill gas through a set of compressor units.

A schematic of the engines is shown in **Figure 5.1-1**.

The engine testing was conducted while the unit is operated the at maximum capacity of 1600 kW (+/- 10%)

An EPA Method 1 data sheet for the engines is included in **Figure 5.11-2**. These and all measurements provided before the test team arrives on site were verified and included in the appendices to this report.

3.0 SUMMARY AND DISCUSSION OF RESULTS

The compliance testing results for Engines 1, 2 & 4 (FIN: ENG01, ENG02 and ENG04) at the Waste Management, Inc. – Skyline RDF are shown in **Table 3-1**. The indicated pollutants are CO and NOx emissions in unit of the emission standard (g/BHP-Hr and lb/Mw-Hr). This data is an average of the three one-hour test runs conducted on the engine. The reference test data are enclosed in **Appendices A & B** and the corresponding process data collected from the engine operations screen and the portable GEM 1000 are included in **Appendix D**. Each engine is rated for 2233 horsepower with ~1600 Kw of power produced, the testing was conducted at those levels (+/- 10%) for all engines tested.

Engine #3 (FIN: ENG03) was tested on December 9, 2010. The report for that testing was submitted to TCEQ on February 8, 2011.

Table 3-1. Compliance Test Results

Parameter	Result[1]	Permit Limit
Engine #1 – 2/25/11 (EPN/FIN: ENG01)		
Engine #1 – NOx g/BHP-Hr NOx lb/Mw-Hr	0.49 1.49	30 TAC §117.410 - 0.6 g NO_X / BHP-Hr Standard Permit No. 78639 - 1.9 lb/Mw-Hr
Engine #1 – CO g/BHP-Hr	2.10	30 TAC §117.410 – 3.0 g CO / BHP-Hr Standard Permit No. 78639 - 3.0 g CO / BHP-Hr
Engine #2 – 2/25/11 (EPN/FIN: ENG02)		
Engine #2 – NOx g/BHP-Hr NOx lb/Mw-Hr	0.46 1.41	30 TAC §117.410 - 0.6 g NO_X / BHP-Hr Standard Permit No. 78639 - 1.9 lb/Mw-Hr
Engine #2 – CO g/BHP-Hr	2.30	30 TAC §117.410 – 3.0 g CO / BHP-Hr Standard Permit No. 78639 - 3.0 g CO / BHP-Hr
Engine #4 – 2/24/11 (EPN/FIN: ENG04)		
Engine #4 – NOx g/BHP-Hr NOx lb/Mw-Hr	0.57 1.74	30 TAC §117.410 - 0.6 g NO_X / BHP-Hr Standard Permit No. 78639 - 1.9 lb/Mw-Hr
Engine #4 – CO g/BHP-Hr	2.40	30 TAC §117.410 – 3.0 g CO / BHP-Hr Standard Permit No. 78639 - 3.0 g CO / BHP-Hr

4.0 POLLUTANTS AND TEST METHODS

Pollutant Tested:	NO_x	EPA Method 7E – Title 40 CFR 60, Appendix A
	CO	EPA Method 10 – Title 40 CFR 60, Appendix A

5.0 TEST PROCEDURES AND RESULTS

5.10 Sampling Procedures

Testing was completed per EPA test methods 1, 2, 3A, 4, 7E and 10 defined in 40 CFR Part 60 Appendix A.

5.11 Volumetric Flow Rates

RMCEINC determined the number and location of the traverse points for volumetric flow rate measurement according to the procedures outlined in EPA Method 1. When determining the location and number of sample points, RMCEINC took into account the number of sample ports, duct configuration, and location of upstream and downstream flow disturbances. **Figure 5.11-1** illustrates the engine and the port location. **Figure 5.11-3** provides the EPA Method 1 data for the engines.

The flue gas velocity and volumetric flow rate were determined according to the procedures of EPA Method 2. A Type S pitot tube with a Type K thermocouple was used to measure velocity pressure and stack gas temperature at each sample point. Each pitot tube conformed to the geometric specifications of EPA Method 2 and was assigned a coefficient of 0.84. An umbilical cord connected the pitot tube to the meter box inclined manometer and digital temperature readout. RMCEINC leak-checked the pitot tube prior to and after conducting the traverse.

RMCEINC determined the flue gas composition and molecular weight using EPA Methods 3A and 4 procedures. A schematic of the Method 1-4 sampling train is presented in **Figure 5.11-2**. CO_2 values were obtained by Orsat apparatus, that data is included in **Appendix B**.

Figure 5.11-1 – Engine Schematic / Diagram.

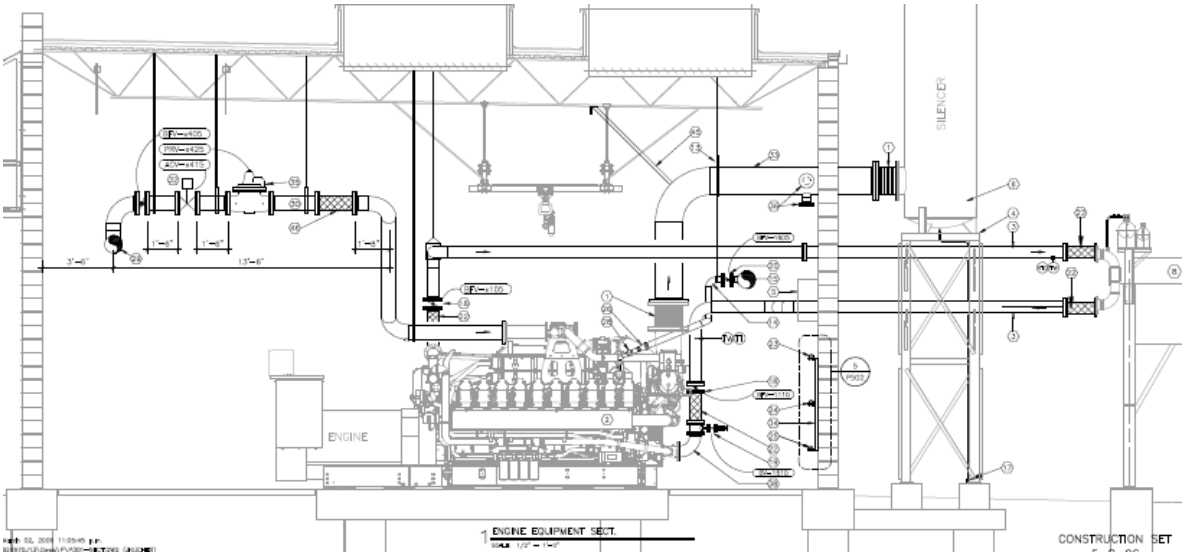

Stack Information

	Skyline – Engines
Shape of the test plane	Round
Internal diameter	15”
Source sampling system approximate height (AGL)	~ 12’
Reference Flow Sampling Ports (Est. Offset from North)	45° & 135°

Figure 5.11-2 – EPA Methods 1-4 Sampling Train Schematic / Diagram.

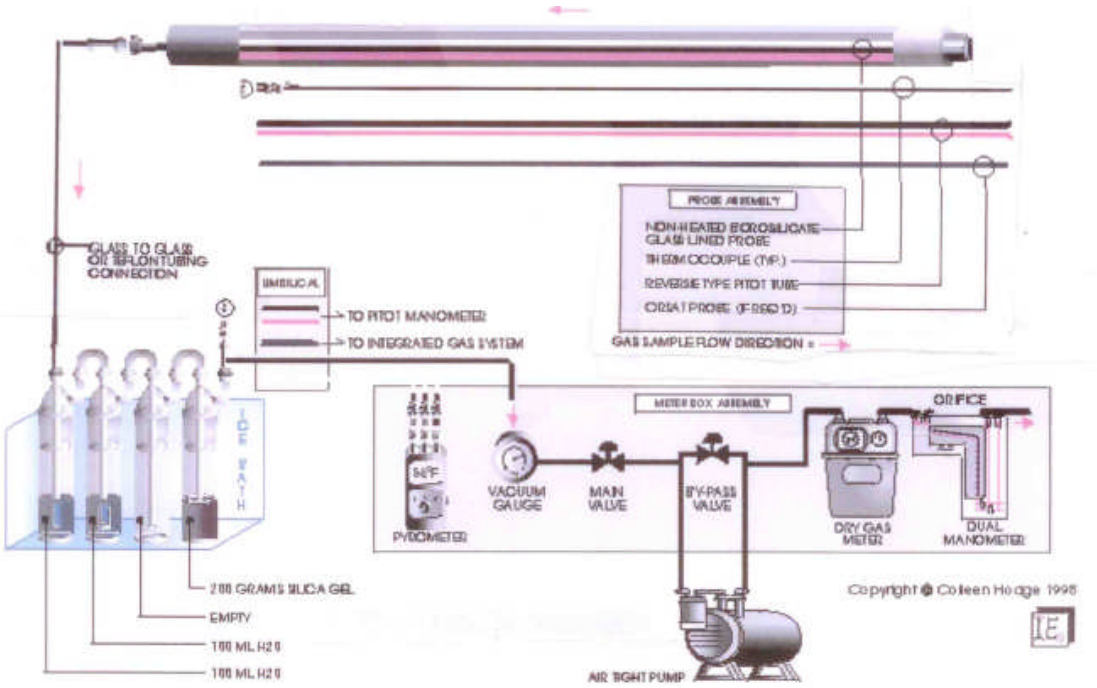

Figure 5.11-3 – EPA Method 1 – Engines 1, 2, & 4

METHOD 1 - SAMPLE AND VELOCITY TRAVERSES FOR CIRCULAR SOURCES

Plant Name	WMRE-Skyline RDF	**Date**	2/24-25/2011
Sampling Location	Engine 1, 2 & 4 (FIN: ENG01, ENG02, & ENG04)	**Project #**	2011-15029
Operator	AM/RC	**# of Ports Available**	2
Stack Type	Circular	**# of Ports Used**	2
Stack Size	Small	**Port Inside Diameter**	3

Circular Stack or Duct Diameter			
Distance to Far Wall of Stack	(L_{fw})	24.00	in
Distance to Near Wall of Stack	(L_{nw})	8.50	in
(=Lfw - Lnw) **Diameter of Stack**	(D)	15.50	in
(=3.14(D/2/Cunits)2) **Area of Stack**	(A_s)	1.31	ft^2

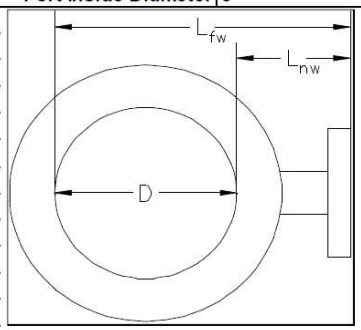

Distance from Port to Disturbances			
Distance Upstream	(B)	48.00	in
(=B/D) **Diameters Upstream**	(B_D)	3.10	diameters
Distance Downstream	(A)	60.00	in
(=A/D) **Diameters Downstream**	(A_D)	3.87	diameters

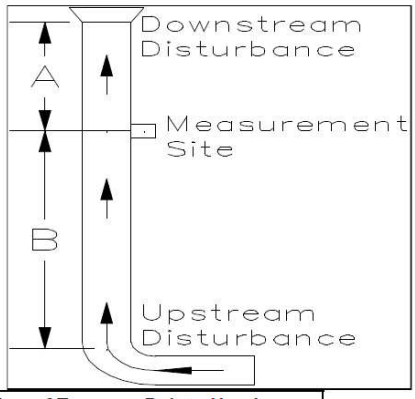

Number of Traverse Points Required			
Diameters to Flow Disturbance		**Minimum Number of[1] Traverse Points**	
Up Stream	**Down Stream**	**Particulate Points**	**Velocity Points**
2.00-4.99	0.50-1.24	24	16
5.00-5.99	1.25-1.49	20	16
6.00-6.99	1.50-1.74	16	12
7.00-7.99	1.75-1.99	12	12
>= 8.00	>=2.00	8 or 12[2]	8 or 12[2]
Upstream Spec		24	16
Downstream Spec		8	8
Traverse Pts Required		24	16

[1] Check Minimum Number of Points for the Upstream and Downstream conditions, then use the largest.
[2] 8 for Circular Stacks 12 to 24 inches
12 for Circular Stacks over 24 inches

Number of Traverse Points Used			
2	**Ports by**	8	**Across**
16	**Pts Used**	16	**Required**
☐	**Particulate**	☑	**Velocity**

Location of Traverse Points in Circular Stacks						
Traverse Point Number	(Fraction of Stack Diameter from Inside Wall to Traverse Point) Number of Traverse Points on a Diameter					
	2	4	6	8	10	12
1	.146	.067	.044	.032	.026	.021
2	.854	.250	.146	.105	.082	.067
3		.750	.296	.194	.146	.118
4		.933	.704	.323	.226	.177
5			.854	.677	.342	.250
6			.956	.806	.658	.356
7				.895	.774	.644
8				.968	.854	.750
9					.918	.823
10					.974	.882
11						.933
12						.979

Traverse Point Locations			
Traverse Point Number	**Fraction of Stack Diameter**	**Distance from Inside Wall**	**Distance Including Nipple Length**
		in	in
1	0.032	4/8	9
2	0.105	1 5/8	10 1/8
3	0.194	3	11 4/8
4	0.323	5	13 4/8
5	0.677	10 4/8	19
6	0.806	12 4/8	21
7	0.895	13 7/8	22 3/8
8	0.968	15	23 4/8
9			
10			
11			
12			

5.12 Instrumental Test Equipment and Procedures

The test program includes the measurement of exhaust gas concentrations of CO, NO_x, and O_2. RMCEINC used the procedures that conform to the requirements of Title 40 CFR Part 60, Appendix A, Methods 1, 2, 3A, 4, 7E and 10. Each of the three test runs included a minimum of one hour of continuous flue gas sampling. Concentration measurements of O_2, CO and NO_x, were made according to EPA Methods 3A, 7E and 10 using the analyzers listed in **Table 5.12-1. Figure 5.12-1** is a schematic of the wet/dry extractive reference measurement gas sampling system used by RMCEINC. All components of the sampling system that contact the sample are stainless steel, glass, or Teflon.

A sampling probe provides a method of drawing a continuous sample of flue gases. The probe assembly is temperature controlled to maintain the sample above the dew point and includes a calibration value and sample filter. A temperature controlled Teflon umbilical connects the probe assembly to an ice bath condenser. The condenser is equipped with a condensate discharge pump to continuously remove the condensate from the condenser traps. The dried sample is then transported to the mobile laboratory's sample manifold.

TABLE 5.12-1REFERENCE METHOD ANALYZERS

Parameter	Analyzer	Analytical Technique	Instrument Span
NO_x	Thermo Environmental Instruments Model 42	Chemiluminescence	0-259, ppm
CO	Thermo Environmental Instruments Model 48	Gas Filter Correlation	0-1000, ppm
O_2	Teledyne – 3300	Fuel Cell	0-21 %

Figure 5.12-1. Reference Method Gas Sampling System Diagram

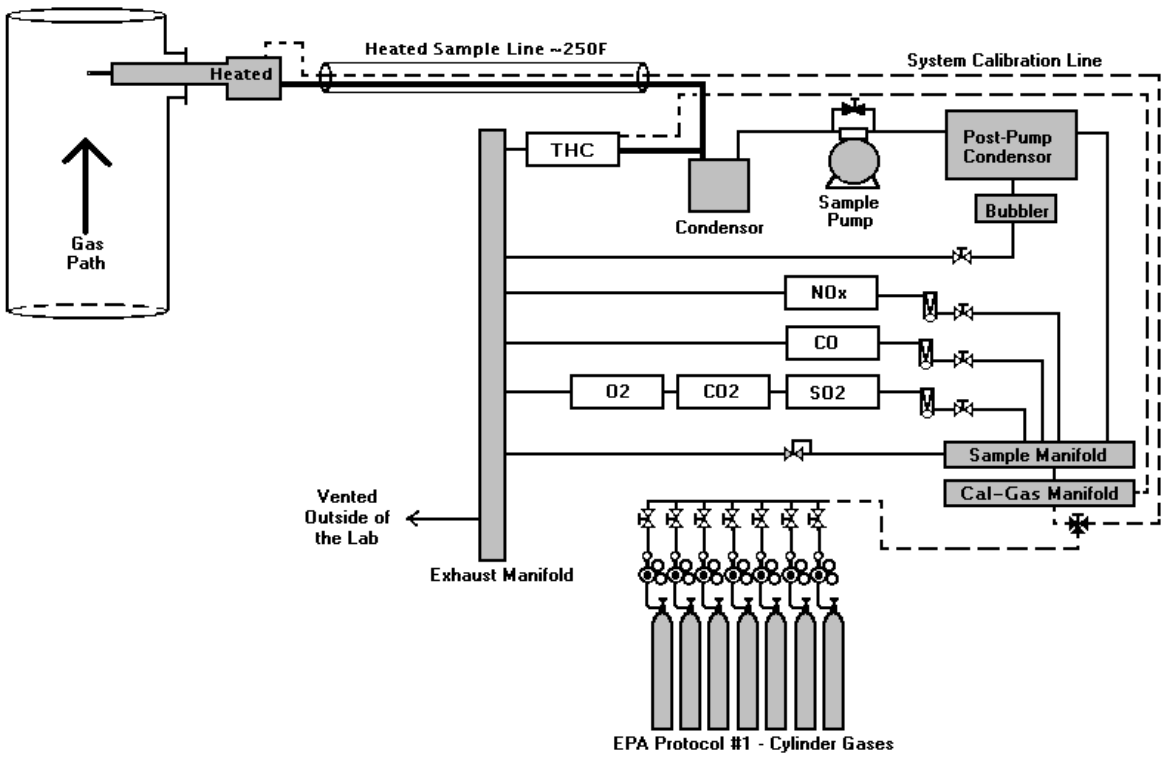

5.13 Instrumental Analytical Data

RMCEINC performed test runs to measures the flue gas for NO_x and CO in terms of the emission rates (lb/Hr, g/BHP-Hr and lb/Mw-Hr for NO_X). A three-point (zero, mid-range, and high-range) analyzer calibration error check on each reference analyzer was performed before initiating the testing. This check is conducted after final calibration adjustments are made by injecting the calibration gases directly into each gas analyzer and recording the responses on the reference data acquisition system.

RMCEINC conducts zero and upscale calibration checks both before and after each test run in order to quantify measurement system calibration drift and sampling system bias. Upscale is either the low-, mid- or high-range gas, whichever most closely approximates the flue gas level. During these checks, the calibration gases are introduced into the sampling system through a 3-way valve assembly at the probe outlet so that the calibration gases are analyzed in the same manner as the flue gas samples.

RMCEINC conducted a three-point traverse of each stack as stipulated in 40 CFR 60, Appendix A, Method 7E. This traverse is conducted during the first run of each set of three for the engines. The percent O_2 and the ppm NO_{Xx} and CO were within the specifications of the section and therefore a single point was used for each test run thereafter, this point was chosen to most accurately represent the mean of the three points tested during the stratification test.

RMCEINC recorded the reference analyzer measurements as 1-minute and 60-minute averages on its DAS. All test run concentration results were determined from the average gas concentrations measured during the run and adjusted based on the zero and upscale sampling system bias check results (Equation 7E-1 presented in CFR; Title 40 Part 60, Method 7E, Section 8). The reference CO and NO_x emission values in terms of pounds per hour and grams per brake horsepower hour were computed from each test run average of adjusted, dry basis CO, NO_x and percent O_2 using the Title 40 CFR Part 60, Appendix A, Method 19.

6.0 EQUIPMENT CALIBRATION AND QUALITY ASSURANCE

RMCEINC followed the calibration and quality assurance procedures of EPA Methods 1, 2, 3A, 4, 7E and 10 throughout the test program. The maintenance for our meterboxes, probes, analyzers and a majority of our other test equipment is performed off site by either Clean Air Engineering or Millenium Instruments. These companies ensure that our equipment is operating correctly and within the specification of the respective methods. All equipment is calibrated in accordance with the EPA Methods and guidelines.

The results of sampling system bias and calibration drift tests for each test run are calculated and presented in the test report. Cylinder gases used during the testing are certified to meet or exceed EPA Protocol 1 requirements. The meter box calibrations, pitot tube inspections, calibration gas certificates of analysis and the analyzer quality assurance checks are included in **Appendix C**.

RMCEINC uses computers throughout the test program. Spreadsheets and software programs are checked in our office for accuracy. Software used by RMCEINC is structured to eliminate human errors in data entry where possible by automating the process. When possible RMCEINC, inputs field data directly into the DAS system and eliminates the hand written field data sheets. These systems provide an accurate measurement of the raw test data and are not used to modify or change test data in any manner. Equations used in these systems are taken directly from the CFR when possible and notations are provided if originated from an alternate source or customized in any manner.

APPENDIX A. TEST SUMMARY SHEETS

Emissions Summary

REFERENCE DATA SUMMARY

Company: Skyline RDF
Source: Engine #4, 1 & 2

Date: 2/24/2011
Project #: 2011-15028

CAL	RUN #	Test Duration 22:17 Start Time	End Time	O2-A %	CO-A ppm	NOx-A ppm		NOx-B ppm	CO-B ppm	O2-B %	DSCFM
				DATA Link from the DATA Logger							
					Engine #4						**Engine #4**
	1	2/24/2011 14:00	15:00	8.48	643.80	86.45					4446.0
0:06	2	2/24/2011 15:06	16:06	8.65	613.90	91.46					4346.0
0:05	3	2/24/2011 16:11	**17:11**	8.88	605.30	91.83					4286.0
					Engine #1				**Engine #2**		**Eng #1**
15:49	4	2/25/2011 9:00	10:00	8.48	558.60	77.60		73.39	625.60	7.39	4245.0
0:07	5	2/25/2011 10:07	11:07	8.55	552.20	77.05		73.37	603.30	7.40	4227.0
0:10	6	2/25/2011 11:17	12:17	8.62	564.10	81.76		74.13	585.80	7.47	4300.0
	7		13:23								
	8		14:29								
	9		15:35								
	10		16:41								
	11		17:47								
	12		18:53								
	13		19:59								
	14		21:05								
	15		22:11								
			AVERAGE	8.61	589.65	84.36		73.63	604.90	7.42	

	Start Time	End Time		NOx-A		lb/Mw-Hr	NOx-A			CO-A	NOx-A	g/HP-Hr	NOx-B	CO-B	CO-A	NOx-A	lbs/Hr	NOx-B	CO-B	
			Wet based measurements corrected from DATA Logger																	
			Engine #4							**Engine #4**					**Engine #4**					
1	2/24/2011 14:00	15:00		1.71						2.53	0.56				12.47	2.75				
2	2/24/2011 15:06	16:06		1.79						2.36	0.58				11.627	2.85				
3	2/24/2011 16:11	17:11		1.73						2.30	0.57				11.306	2.82				
			Engine #1				**Engine #2**			**Engine #1**			**Engine #2**		**Engine #1**			**Engine #2**		**Eng #2**
4	2/25/2011 9:00	10:00		1.47			1.42			2.10	0.48		0.46	2.40	10.33	2.36		2.28	11.83	4341
5	2/25/2011 10:07	11:07		1.47			1.42			2.07	0.47		0.46	2.31	10.17	2.33		2.28	11.38	4330
6	2/25/2011 11:17	12:17		1.55			1.40			2.15	0.51		0.46	2.20	10.57	2.52		2.25	10.82	4239
7		13:23																		
8		14:29																		
9		15:35																		
10		16:41																		
11		17:47																		
12		18:53																		
13		19:59																		
14		21:05																		
15		22:11																		
		AVERAGE		1.62			1.41			2.19	0.52		0.46	2.30	10.80	2.58		2.27	11.35	

APPENDIX B. FIELD TEST DATA W/ INSTRUMENTAL TEST DATA

Method 1-4 Field Data

Flow Rate Determinations

Calibration Summaries

Instrumental Test Run Data

Reference Data Summary

METHOD 1 - SAMPLE AND VELOCITY TRAVERSES FOR CIRCULAR SOURCES

Plant Name	WMRE-Skyline RDF	**Date**	2/24-25/2011
Sampling Location	Engine 1, 2 & 4 (FIN: ENG01, ENG02, & ENG04)	**Project #**	2011-15029
Operator	AM/RC	**# of Ports Available**	2
Stack Type	Circular	**# of Ports Used**	2
Stack Size	Small	**Port Inside Diameter**	3

Circular Stack or Duct Diameter			
Distance to Far Wall of Stack	(L_{fw})	24.00	in
Distance to Near Wall of Stack	(L_{nw})	8.50	in
(=Lfw - Lnw) **Diameter of Stack**	(D)	15.50	in
(=3.14(D/2/Cunits)2) **Area of Stack**	(A_s)	1.31	ft^2

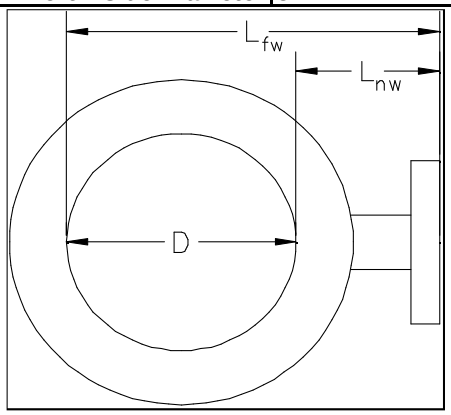

Distance from Port to Disturbances			
Distance Upstream	(B)	48.00	in
(=B/D) **Diameters Upstream**	(B_D)	3.10	diameters
Distance Downstream	(A)	60.00	in
(=A/D) **Diameters Downstream**	(A_D)	3.87	diameters

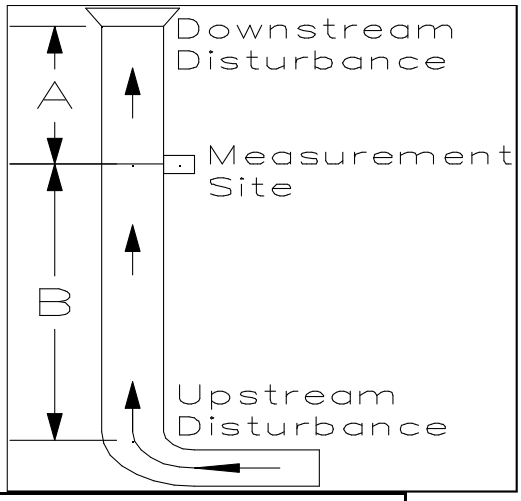

Number of Traverse Points Required			
Diameters to Flow Disturbance		**Minimum Number of[1] Traverse Points**	
Up Stream	**Down Stream**	**Particulate Points**	**Velocity Points**
2.00-4.99	0.50-1.24	24	16
5.00-5.99	1.25-1.49	20	16
6.00-6.99	1.50-1.74	16	12
7.00-7.99	1.75-1.99	12	12
>= 8.00	>=2.00	8 or 12[2]	8 or 12[2]
Upstream Spec		24	16
Downstream Spec		8	8
Traverse Pts Required		24	16

[1] Check Minimum Number of Points for the Upstream and Downstream conditions, then use the largest.

[2] 8 for Circular Stacks 12 to 24 inches
12 for Circular Stacks over 24 inches

Number of Traverse Points Used			
2	**Ports by**	8	**Across**
16	**Pts Used**	16	**Required**
☐	**Particulate**	☑	**Velocity**

Location of Traverse Points in Circular Stacks						
Traverse Point Number	(Fraction of Stack Diameter from Inside Wall to Traverse Point) Number of Traverse Points on a Diameter					
	2	4	6	8	10	12
1	.146	.067	.044	.032	.026	.021
2	.854	.250	.146	.105	.082	.067
3		.750	.296	.194	.146	.118
4		.933	.704	.323	.226	.177
5			.854	.677	.342	.250
6			.956	.806	.658	.356
7				.895	.774	.644
8				.968	.854	.750
9					.918	.823
10					.974	.882
11						.933
12						.979

Traverse Point Locations			
Traverse Point Number	**Fraction of Stack Diameter**	**Distance from Inside Wall**	**Distance Including Nipple Length**
		in	in
1	0.032	4/8	9
2	0.105	1 5/8	10 1/8
3	0.194	3	11 4/8
4	0.323	5	13 4/8
5	0.677	10 4/8	19
6	0.806	12 4/8	21
7	0.895	13 7/8	22 3/8
8	0.968	15	23 4/8
9			
10			
11			
12			

METHOD 4 RUN SUMMARY SHEET

Company: Waste Management - Skyline RDF **Load:** 1600 kW
Source: Engine #4
Test Location: Exhaust Duct

Run:	**M4-R1**	**M4-R2**	**M4-R3**
Flow Runs:	1	2	3
Start Time:	2/24/2011 14:00	2/24/2011 15:06	2/24/2011 16:11
End Time:	2/24/2011 15:00	2/24/2011 16:06	2/24/2011 17:11

RUN DATA

Meter voume start (cu. ft.):	214.680	238.215	120.812
Meter volume finish (cu. ft.):	237.864	261.247	143.896
Meter calib. factor (Y):	1.0010	1.0010	1.0010
Barometric pressure (in. Hg):	29.83	29.83	29.92
Average Delta-H (in. H2O):	1.77	1.77	1.77
Gas meter temperature (deg F):	99.0	103.0	91.0
Sil-Gel total wt. H2O collected (grams):	9.4	7.2	5.5
Impinger total volume H2O collected (ml):	50	54	63

CALCULATED RESULTS

Gas volume sampled (DSCF)*:	21.950	21.642	22.230
Water vapor volume (SCF)*:	2.796	2.881	3.224
Moisture content (% volume):	**11.3**	**11.7**	**12.7**

* 68 deg F (20 deg C) - 29.92 in. Hg

VOLUMETRIC FLOW RATE DETERMINATION

Company: Waste Management - Skyline RDF
Source: Engine #4
Test Location: Exhaust Duct

Conducted By: AM/RC

Load: 1600 kW
Run: 1
Start Time: 2/24/11 14:00
End Time: 2/24/11 15:00

TEST DATA

Test Point	Delta P (in H2O)	Temp. (Deg F)	Test Point	Delta P (in H2O)	Temp. (Deg F)
A-1	2.700	898	B-5	4.000	892
A-2	3.200	898	B-6	4.300	892
A-3	3.300	898	B-7	3.400	892
A-4	3.500	898	B-8	3.100	892
A-5	4.200	898			
A-6	3.900	898			
A-7	3.100	898			
A-8	2.500	898			
B-1	2.700	892			
B-2	3.200	892			
B-3	3.100	892			
B-4	3.600	892			

Duct Area:	188.7	(A)	sq. inches
Barometric Pressure:	29.83	(Pbar)	inches Hg
Static Pressure:	-4.30	(PG)	inches H2O
Pitot Tube Coefficient:	0.84	(Cp)	
Percent O2:	8.5	% O2	
Percent CO2:	11.3	% CO2	
Percent Nitrogen:	80.2	% N2	
Percent Moisture:	11.3	$\%H_20$	
Average Delta P:	3.36		inches H2O
Root Mean Sq. Delta P:	3.34	(Pavg)	inches H2O
Mean Temperature:	895.0	(Ts)	Degrees F
Number Of Traverse Points:	16		

CALCULATIONS

DRY MOLE FRACTION OF STACK GAS: Mfd = 1 - ($\%H_2O$ / 100)	Mfd =	0.887	
ABSOLUTE STACK GAS PRESSURE: Ps = Pbar + (Pg / 13.6)	Ps =	29.51	in. Hg
DRY MOLECULAR WEIGHT OF STACK GAS: Md = 0.44 ($\%CO_2$) + 0.32 ($\%O_2$) + 0.28 ($\%N_2$	Md =	30.15	lb/lb-mole
WET MOLECULAR WEIGHT OF STACK GAS: Ms = (Md)(Mfd) + 0.18 ($\%H_2O$)	Ms =	28.77	lb/lb-mole
AVERAGE STACK GAS VELOCITY: Vs = 85.49(Cp) X {(Pavg)(Ts + 460)/[(Ps)(Ms)]}$^{\wedge 0.5}$	Vs =	165.8	ft/sec
DRY VOLUMETRIC FLOW RATE: Qsd = 7.353(60)(Mfd)(Vs)(A)(Ps) / (Ts + 460)	Qsd =	4,446	DSCFM (DRY)
WET VOLUMETRIC FLOW RATE: Qsw = Qsd / Mfd	Qaw =	5,012.0	SCFM (WET)

VOLUMETRIC FLOW RATE DETERMINATION

Company: Waste Management - Skyline RDF
Source: Engine #4
Test Location: Exhaust Duct

Conducted By: AM/RC

Load: 1600 kW
Run: 2
Start Time: 2/24/11 15:06
End Time: 2/24/11 16:06

TEST DATA

Test Point	Delta P (in H2O)	Temp. (Deg F)	Test Point	Delta P (in H2O)	Temp. (Deg F)
A-1	2.500	902	B-5	4.200	899
A-2	2.600	902	B-6	4.100	899
A-3	2.800	902	B-7	3.700	899
A-4	3.200	902	B-8	2.900	899
A-5	3.500	902			
A-6	3.700	902			
A-7	4.000	902			
A-8	2.900	902			
B-1	2.500	899			
B-2	2.900	899			
B-3	3.000	899			
B-4	3.400	899			

Duct Area:	188.7	(A)	sq. inches
Barometric Pressure:	29.83	(Pbar)	inches Hg
Static Pressure:	-3.20	(PG)	inches H2O
Pitot Tube Coefficient:	0.84	(Cp)	
Percent O2:	8.7	% O2	
Percent CO2:	11.0	% CO2	
Percent Nitrogen:	80.4	% N2	
Percent Moisture:	11.7	$\%H_20$	
Average Delta P:	3.24		inches H2O
Root Mean Sq. Delta P:	3.22	(Pavg)	inches H2O
Mean Temperature:	900.5	(Ts)	Degrees F
Number Of Traverse Points:	16		

CALCULATIONS

DRY MOLE FRACTION OF STACK GAS: Mfd = 1 - ($\%H_2O$ / 100)	Mfd =	0.883	
ABSOLUTE STACK GAS PRESSURE: Ps = Pbar + (Pg / 13.6)	Ps =	29.59	in. Hg
DRY MOLECULAR WEIGHT OF STACK GAS: Md = 0.44 ($\%CO_2$) + 0.32 ($\%O_2$) + 0.28 ($\%N_2$	Md =	30.11	lb/lb-mole
WET MOLECULAR WEIGHT OF STACK GAS: Ms = (Md)(Mfd) + 0.18 ($\%H_2O$)	Ms =	28.68	lb/lb-mole
AVERAGE STACK GAS VELOCITY: Vs = 85.49(Cp) X {(Pavg)(Ts + 460)/[(Ps)(Ms)]}$^{\wedge 0.5}$	Vs =	163.2	ft/sec
DRY VOLUMETRIC FLOW RATE: Qsd = 7.353(60)(Mfd)(Vs)(A)(Ps) / (Ts + 460)	Qsd =	4,346	DSCFM (DRY)
WET VOLUMETRIC FLOW RATE: Qsw = Qsd / Mfd	Qaw =	4,924.0	SCFM (WET)

VOLUMETRIC FLOW RATE DETERMINATION

Company: Waste Management - Skyline RDF
Source: Engine #4
Test Location: Exhaust Duct

Conducted By: AM/RC

Load: 1600 kW
Run: 3
Start Time: 2/24/11 16:11
End Time: 2/24/11 17:11

TEST DATA

Test Point	Delta P (in H2O)	Temp. (Deg F)	Test Point	Delta P (in H2O)	Temp. (Deg F)
A-1	2.300	913	B-5	4.100	911
A-2	2.600	913	B-6	4.000	911
A-3	2.900	913	B-7	3.500	911
A-4	3.100	913	B-8	2.700	911
A-5	3.800	913			
A-6	4.100	913			
A-7	4.000	913			
A-8	2.900	913			
B-1	3.100	911			
B-2	2.500	911			
B-3	2.800	911			
B-4	3.300	911			

Duct Area:	188.7	(A)	sq. inches
Barometric Pressure:	29.83	(Pbar)	inches Hg
Static Pressure:	-2.70	(PG)	inches H2O
Pitot Tube Coefficient:	0.84	(Cp)	
Percent O2:	8.3	% O2	
Percent CO2:	10.7	% CO2	
Percent Nitrogen:	81.1	% N2	
Percent Moisture:	12.7	$\%H_20$	
Average Delta P:	3.23		inches H2O
Root Mean Sq. Delta P:	3.20	(Pavg)	inches H2O
Mean Temperature:	912.0	(Ts)	Degrees F
Number Of Traverse Points:	16		

CALCULATIONS

DRY MOLE FRACTION OF STACK GAS: Mfd = 1 - ($\%H_2O$ / 100)	Mfd =	0.873	
ABSOLUTE STACK GAS PRESSURE: Ps = Pbar + (Pg / 13.6)	Ps =	29.63	in. Hg
DRY MOLECULAR WEIGHT OF STACK GAS: Md = 0.44 ($\%CO_2$) + 0.32 ($\%O_2$) + 0.28 ($\%N_2$	Md =	30.04	lb/lb-mole
WET MOLECULAR WEIGHT OF STACK GAS: Ms = (Md)(Mfd) + 0.18 ($\%H_2O$)	Ms =	28.52	lb/lb-mole
AVERAGE STACK GAS VELOCITY: Vs = 85.49(Cp) X {(Pavg)(Ts + 460)/[(Ps)(Ms)]}$^{\wedge 0.5}$	Vs =	163.8	ft/sec
DRY VOLUMETRIC FLOW RATE: Qsd = 7.353(60)(Mfd)(Vs)(A)(Ps) / (Ts + 460)	Qsd =	4,286	DSCFM (DRY)
WET VOLUMETRIC FLOW RATE: Qsw = Qsd / Mfd	Qaw =	4,908.2	SCFM (WET)

METHOD 4 RUN SUMMARY SHEET

Company: Waste Management - Skyline RDF **Load:** 1600 kW
Source: Engine #1
Test Location: Exhaust Duct

Run:	**M4-R1**	**M4-R2**	**M4-R3**
Flow Runs:	1	2	3
Start Time:	2/25/2011 9:00	2/25/2011 10:07	2/25/2011 11:17
End Time:	2/25/2011 10:00	2/25/2011 11:07	2/25/2011 12:17

RUN DATA

Meter voume start (cu. ft.):	285.631	331.225	377.031
Meter volume finish (cu. ft.):	308.166	353.882	399.345
Meter calib. factor (Y):	1.0010	1.0010	1.0010
Barometric pressure (in. Hg):	30.19	30.19	29.92
Average Delta-H (in. H2O):	1.77	1.77	1.77
Gas meter temperature (deg F):	58.0	62.0	64.0
Sil-Gel total wt. H2O collected (grams):	4.2	5.5	5.4
Impinger total volume H2O collected (ml):	58	58	60

CALCULATED RESULTS

Gas volume sampled (DSCF)*:	23.301	23.238	22.596
Water vapor volume (SCF)*:	2.928	2.989	3.078
Moisture content (% volume):	**11.2**	**11.4**	**12.0**

* 68 deg F (20 deg C) - 29.92 in. Hg

VOLUMETRIC FLOW RATE DETERMINATION

Company: Waste Management - Skyline RDF
Source: Engine #1
Test Location: Exhaust Duct

Conducted By: AM/RC

Load: 1600 kW
Run: 1
Start Time: 2/25/11 9:00
End Time: 2/25/11 10:00

TEST DATA

Test Point	Delta P (in H2O)	Temp. (Deg F)	Test Point	Delta P (in H2O)	Temp. (Deg F)
A-1	2.700	910	B-5	3.400	918
A-2	2.800	910	B-6	3.300	918
A-3	2.900	910	B-7	3.000	918
A-4	3.100	910	B-8	2.900	918
A-5	3.200	910			
A-6	3.900	910			
A-7	3.100	910			
A-8	2.500	910			
B-1	2.700	918			
B-2	3.200	918			
B-3	3.100	918			
B-4	3.200	918			

Duct Area:	188.7	(A)	sq. inches
Barometric Pressure:	30.19	(Pbar)	inches Hg
Static Pressure:	-5.40	(PG)	inches H2O
Pitot Tube Coefficient:	0.84	(Cp)	
Percent O2:	8.5	% O2	
Percent CO2:	11.3	% CO2	
Percent Nitrogen:	80.2	% N2	
Percent Moisture:	11.2	$\%H_20$	
Average Delta P:	3.06		inches H2O
Root Mean Sq. Delta P:	3.05	(Pavg)	inches H2O
Mean Temperature:	914.0	(Ts)	Degrees F
Number Of Traverse Points:	16		

CALCULATIONS

DRY MOLE FRACTION OF STACK GAS: Mfd = 1 - ($\%H_2O$ / 100)	Mfd =	0.888	
ABSOLUTE STACK GAS PRESSURE: Ps = Pbar + (Pg / 13.6)	Ps =	29.79	in. Hg
DRY MOLECULAR WEIGHT OF STACK GAS: Md = 0.44 ($\%CO_2$) + 0.32 ($\%O_2$) + 0.28 ($\%N_2$	Md =	30.15	lb/lb-mole
WET MOLECULAR WEIGHT OF STACK GAS: Ms = (Md)(Mfd) + 0.18 ($\%H_2O$)	Ms =	28.79	lb/lb-mole
AVERAGE STACK GAS VELOCITY: Vs = 85.49(Cp) X {(Pavg)(Ts + 460)/[(Ps)(Ms)]}$^{\wedge 0.5}$	Vs =	158.8	ft/sec
DRY VOLUMETRIC FLOW RATE: Qsd = 7.353(60)(Mfd)(Vs)(A)(Ps) / (Ts + 460)	Qsd =	4,245	DSCFM (DRY)
WET VOLUMETRIC FLOW RATE: Qsw = Qsd / Mfd	Qaw =	4,778.6	SCFM (WET)

VOLUMETRIC FLOW RATE DETERMINATION

Company: Waste Management - Skyline RDF
Source: Engine #1
Test Location: Exhaust Duct

Conducted By: AM/RC

Load: 1600 kW
Run: 2
Start Time: 2/25/11 10:07
End Time: 2/25/11 11:07

TEST DATA

Test Point	Delta P (in H2O)	Temp. (Deg F)	Test Point	Delta P (in H2O)	Temp. (Deg F)
A-1	2.500	921	B-5	3.500	919
A-2	2.700	921	B-6	3.200	919
A-3	2.800	921	B-7	3.100	919
A-4	3.000	921	B-8	2.800	919
A-5	3.100	921			
A-6	3.700	921			
A-7	3.200	921			
A-8	2.700	921			
B-1	2.900	919			
B-2	3.300	919			
B-3	3.200	919			
B-4	3.400	919			

Duct Area:	188.7	(A)	sq. inches
Barometric Pressure:	30.19	(Pbar)	inches Hg
Static Pressure:	-6.80	(PG)	inches H2O
Pitot Tube Coefficient:	0.84	(Cp)	
Percent O2:	8.7	% O2	
Percent CO2:	11.0	% CO2	
Percent Nitrogen:	80.4	% N2	
Percent Moisture:	11.4	$\%H_20$	
Average Delta P:	3.07		inches H2O
Root Mean Sq. Delta P:	3.06	(Pavg)	inches H2O
Mean Temperature:	920.0	(Ts)	Degrees F
Number Of Traverse Points:	16		

CALCULATIONS

DRY MOLE FRACTION OF STACK GAS: Mfd = 1 - ($\%H_2O$ / 100)	Mfd =	0.886	
ABSOLUTE STACK GAS PRESSURE: Ps = Pbar + (Pg / 13.6)	Ps =	29.69	in. Hg
DRY MOLECULAR WEIGHT OF STACK GAS: Md = 0.44 ($\%CO_2$) + 0.32 ($\%O_2$) + 0.28 ($\%N_2$	Md =	30.11	lb/lb-mole
WET MOLECULAR WEIGHT OF STACK GAS: Ms = (Md)(Mfd) + 0.18 ($\%H_2O$)	Ms =	28.73	lb/lb-mole
AVERAGE STACK GAS VELOCITY: Vs = 85.49(Cp) X {(Pavg)(Ts + 460)/[(Ps)(Ms)]}$^{\wedge 0.5}$	Vs =	159.8	ft/sec
DRY VOLUMETRIC FLOW RATE: Qsd = 7.353(60)(Mfd)(Vs)(A)(Ps) / (Ts + 460)	Qsd =	4,227	DSCFM (DRY)
WET VOLUMETRIC FLOW RATE: Qsw = Qsd / Mfd	Qaw =	4,770.3	SCFM (WET)

VOLUMETRIC FLOW RATE DETERMINATION

Company: Waste Management - Skyline RDF
Source: Engine #1
Test Location: Exhaust Duct

Conducted By: AM/RC

Load: 1600 kW
Run: 3
Start Time: 2/25/11 11:17
End Time: 2/25/11 12:17

TEST DATA

Test Point	Delta P (in H2O)	Temp. (Deg F)	Test Point	Delta P (in H2O)	Temp. (Deg F)
A-1	2.700	913	B-5	3.300	911
A-2	2.900	913	B-6	3.200	911
A-3	3.100	913	B-7	3.100	911
A-4	3.200	913	B-8	2.900	911
A-5	3.300	913			
A-6	3.500	913			
A-7	3.900	913			
A-8	3.100	913			
B-1	3.000	911			
B-2	2.900	911			
B-3	3.300	911			
B-4	3.400	911			

Duct Area:	188.7	(A)	sq. inches
Barometric Pressure:	30.19	(Pbar)	inches Hg
Static Pressure:	-5.70	(PG)	inches H2O
Pitot Tube Coefficient:	0.84	(Cp)	
Percent O2:	8.3	% O2	
Percent CO2:	10.7	% CO2	
Percent Nitrogen:	81.1	% N2	
Percent Moisture:	12.0	$\%H_20$	
Average Delta P:	3.18		inches H2O
Root Mean Sq. Delta P:	3.17	(Pavg)	inches H2O
Mean Temperature:	912.0	(Ts)	Degrees F
Number Of Traverse Points:	16		

CALCULATIONS

DRY MOLE FRACTION OF STACK GAS: Mfd = 1 - ($\%H_2O$ / 100)	Mfd =	0.880	
ABSOLUTE STACK GAS PRESSURE: Ps = Pbar + (Pg / 13.6)	Ps =	29.77	in. Hg
DRY MOLECULAR WEIGHT OF STACK GAS: Md = 0.44 ($\%CO_2$) + 0.32 ($\%O_2$) + 0.28 ($\%N_2$	Md =	30.04	lb/lb-mole
WET MOLECULAR WEIGHT OF STACK GAS: Ms = (Md)(Mfd) + 0.18 ($\%H_2O$)	Ms =	28.60	lb/lb-mole
AVERAGE STACK GAS VELOCITY: Vs = 85.49(Cp) X {(Pavg)(Ts + 460)/[(Ps)(Ms)]}$^{\wedge 0.5}$	Vs =	162.3	ft/sec
DRY VOLUMETRIC FLOW RATE: Qsd = 7.353(60)(Mfd)(Vs)(A)(Ps) / (Ts + 460)	Qsd =	4,299.9	DSCFM (DRY)
WET VOLUMETRIC FLOW RATE: Qsw = Qsd / Mfd	Qaw =	4,885.7	SCFM (WET)

METHOD 4 RUN SUMMARY SHEET

Company: Waste Management - Skyline RDF **Load:** 1600 kW
Source: Engine #2
Test Location: Exhaust Duct

Run:	**M4-R1**	**M4-R2**	**M4-R3**
Flow Runs:	1	2	3
Start Time:	2/25/2011 9:00	2/25/2011 10:07	2/25/2011 11:17
End Time:	2/25/2011 10:00	2/25/2011 11:07	2/25/2011 12:17

RUN DATA

Meter voume start (cu. ft.):	261.451	308.527	354.112
Meter volume finish (cu. ft.):	284.718	330.985	376.449
Meter calib. factor (Y):	1.0010	1.0010	1.0010
Barometric pressure (in. Hg):	30.19	30.19	30.19
Average Delta-H (in. H2O):	1.77	1.77	1.77
Gas meter temperature (deg F):	58.0	60.0	62.0
Sil-Gel total wt. H2O collected (grams):	5.4	4.6	4.5
Impinger total volume H2O collected (ml):	60	60	60

CALCULATED RESULTS

Gas volume sampled (DSCF)*:	24.048	23.122	22.910
Water vapor volume (SCF)*:	3.078	3.041	3.036
Moisture content (% volume):	**11.3**	**11.6**	**11.7**

* 68 deg F (20 deg C) - 29.92 in. Hg

VOLUMETRIC FLOW RATE DETERMINATION

Company: Waste Management - Skyline RDF
Source: Engine #2
Test Location: Exhaust Duct

Conducted By: AM/RC

Load: 1600 kW
Run: 1
Start Time: 2/25/2011 9:00
End Time: 2/25/2011 10:00

TEST DATA

Test Point	Delta P (in H2O)	Temp. (Deg F)	Test Point	Delta P (in H2O)	Temp. (Deg F)
A-1	2.800	908	B-5	3.300	902
A-2	2.900	908	B-6	3.100	902
A-3	3.100	908	B-7	3.000	902
A-4	3.300	908	B-8	3.000	902
A-5	3.300	908			
A-6	3.800	908			
A-7	3.500	908			
A-8	3.200	908			
B-1	2.800	902			
B-2	3.100	902			
B-3	3.300	902			
B-4	3.500	902			

Duct Area:	188.7	(A)	sq. inches
Barometric Pressure:	30.19	(Pbar)	inches Hg
Static Pressure:	-5.40	(PG)	inches H2O
Pitot Tube Coefficient:	0.84	(Cp)	
Percent O2:	8.0	% O2	
Percent CO2:	11.3	% CO2	
Percent Nitrogen:	80.6	% N2	
Percent Moisture:	11.3	$\%H_20$	
Average Delta P:	3.19		inches H2O
Root Mean Sq. Delta P:	3.18	(Pavg)	inches H2O
Mean Temperature:	905.0	(Ts)	Degrees F
Number Of Traverse Points:	16		

CALCULATIONS

DRY MOLE FRACTION OF STACK GAS: Mfd = 1 - ($\%H_2O$ / 100)	Mfd =	0.887	
ABSOLUTE STACK GAS PRESSURE: Ps = Pbar + (Pg / 13.6)	Ps =	29.79	in. Hg
DRY MOLECULAR WEIGHT OF STACK GAS: Md = 0.44 ($\%CO_2$) + 0.32 ($\%O_2$) + 0.28 ($\%N_2$	Md =	30.13	lb/lb-mole
WET MOLECULAR WEIGHT OF STACK GAS: Ms = (Md)(Mfd) + 0.18 ($\%H_2O$)	Ms =	28.76	lb/lb-mole
AVERAGE STACK GAS VELOCITY: Vs = 85.49(Cp) X {(Pavg)(Ts + 460)/[(Ps)(Ms)]}$^{\wedge 0.5}$	Vs =	161.7	ft/sec
DRY VOLUMETRIC FLOW RATE: Qsd = 7.353(60)(Mfd)(Vs)(A)(Ps) / (Ts + 460)	Qsd =	4,341	DSCFM (DRY)
WET VOLUMETRIC FLOW RATE: Qsw = Qsd / Mfd	Qaw =	4,896.7	KSCFH (WET)
WET VOLUMETRIC FLOW RATE: Qsw = Qsd / Mfd / 60	Qaw =	81.6	KSCFM (WET)

VOLUMETRIC FLOW RATE DETERMINATION

Company: Waste Management - Skyline RDF
Source: Engine #2
Test Location: Exhaust Duct

Conducted By: AM/RC

Load: 1600 kW
Run: 2
Start Time: 2/25/2011 10:07
End Time: 2/25/2011 11:07

TEST DATA

Test Point	Delta P (in H2O)	Temp. (Deg F)	Test Point	Delta P (in H2O)	Temp. (Deg F)
A-1	2.700	911	B-5	3.200	909
A-2	2.900	911	B-6	3.100	909
A-3	3.200	911	B-7	3.000	909
A-4	3.500	911	B-8	2.800	909
A-5	3.900	911			
A-6	3.700	911			
A-7	3.400	911			
A-8	3.100	911			
B-1	2.900	909			
B-2	3.200	909			
B-3	3.400	909			
B-4	3.200	909			

Duct Area:	188.7	(A)	sq. inches
Barometric Pressure:	30.19	(Pbar)	inches Hg
Static Pressure:	-5.20	(PG)	inches H2O
Pitot Tube Coefficient:	0.84	(Cp)	
Percent O2:	8.1	% O2	
Percent CO2:	11.3	% CO2	
Percent Nitrogen:	80.6	% N2	
Percent Moisture:	11.6	$\%H_20$	
Average Delta P:	3.20		inches H2O
Root Mean Sq. Delta P:	3.19	(Pavg)	inches H2O
Mean Temperature:	910.0	(Ts)	Degrees F
Number Of Traverse Points:	16		

CALCULATIONS

DRY MOLE FRACTION OF STACK GAS: Mfd = 1 - ($\%H_2O$ / 100)	Mfd =	0.884	
ABSOLUTE STACK GAS PRESSURE: Ps = Pbar + (Pg / 13.6)	Ps =	29.81	in. Hg
DRY MOLECULAR WEIGHT OF STACK GAS: Md = 0.44 ($\%CO_2$) + 0.32 ($\%O_2$) + 0.28 ($\%N_2$	Md =	30.13	lb/lb-mole
WET MOLECULAR WEIGHT OF STACK GAS: Ms = (Md)(Mfd) + 0.18 ($\%H_2O$)	Ms =	28.72	lb/lb-mole
AVERAGE STACK GAS VELOCITY: Vs = 85.49(Cp) X {(Pavg)(Ts + 460)/[(Ps)(Ms)]}$^{\wedge 0.5}$	Vs =	162.3	ft/sec
DRY VOLUMETRIC FLOW RATE: Qsd = 7.353(60)(Mfd)(Vs)(A)(Ps) / (Ts + 460)	Qsd =	4,330	DSCFM (DRY)
WET VOLUMETRIC FLOW RATE: Qsw = Qsd / Mfd	Qaw =	4,899.7	KSCFH (WET)
WET VOLUMETRIC FLOW RATE: Qsw = Qsd / Mfd / 60	Qaw =	81.7	KSCFM (WET)

VOLUMETRIC FLOW RATE DETERMINATION

Company: Waste Management - Skyline RDF
Source: Engine #2
Test Location: Exhaust Duct

Conducted By: AM/RC

Load: 1600 kW
Run: 3
Start Time: 2/25/2011 11:17
End Time: 2/25/2011 12:17

TEST DATA

Test Point	Delta P (in H2O)	Temp. (Deg F)	Test Point	Delta P (in H2O)	Temp. (Deg F)
A-1	2.600	910	B-5	3.100	914
A-2	2.800	910	B-6	3.000	914
A-3	3.100	910	B-7	2.900	914
A-4	3.300	910	B-8	2.500	914
A-5	3.700	910			
A-6	3.500	910			
A-7	3.300	910			
A-8	3.000	910			
B-1	2.700	914			
B-2	3.100	914			
B-3	3.500	914			
B-4	3.100	914			

Duct Area:	188.7	(A)	sq. inches
Barometric Pressure:	30.19	(Pbar)	inches Hg
Static Pressure:	-4.90	(PG)	inches H2O
Pitot Tube Coefficient:	0.84	(Cp)	
Percent O2:	8.1	% O2	
Percent CO2:	11.3	% CO2	
Percent Nitrogen:	80.6	% N2	
Percent Moisture:	11.7	$\%H_20$	
Average Delta P:	3.08		inches H2O
Root Mean Sq. Delta P:	3.07	(Pavg)	inches H2O
Mean Temperature:	912.0	(Ts)	Degrees F
Number Of Traverse Points:	16		

CALCULATIONS

DRY MOLE FRACTION OF STACK GAS: Mfd = 1 - ($\%H_2O$ / 100)	Mfd =	0.883	
ABSOLUTE STACK GAS PRESSURE: Ps = Pbar + (Pg / 13.6)	Ps =	29.83	in. Hg
DRY MOLECULAR WEIGHT OF STACK GAS: Md = 0.44 ($\%CO_2$) + 0.32 ($\%O_2$) + 0.28 ($\%N_2$	Md =	30.13	lb/lb-mole
WET MOLECULAR WEIGHT OF STACK GAS: Ms = (Md)(Mfd) + 0.18 ($\%H_2O$)	Ms =	28.71	lb/lb-mole
AVERAGE STACK GAS VELOCITY: Vs = 85.49(Cp) X {(Pavg)(Ts + 460)/[(Ps)(Ms)]}$^{\wedge 0.5}$	Vs =	159.2	ft/sec
DRY VOLUMETRIC FLOW RATE: Qsd = 7.353(60)(Mfd)(Vs)(A)(Ps) / (Ts + 460)	Qsd =	4,239	DSCFM (DRY)
WET VOLUMETRIC FLOW RATE: Qsw = Qsd / Mfd	Qaw =	4,801.0	KSCFH (WET)
WET VOLUMETRIC FLOW RATE: Qsw = Qsd / Mfd / 60	Qaw =	80.0	KSCFM (WET)

CEM Traverse Points

Company: Skyline RDF

Date: 2/24/2011

Sampling Location: Engine #4, 1 & 2 - Exhaust Duct

Project #: 2011-15028

Stack Dia. *(in)*	**Nipple** *(in)*
15.5	1

Stratification	N
Wet Scrubber	N
Two Gas Streams	N
Dia. < 2.4 Meters	Y

Select Short Traverse: Y

SHORT Traverse not allowed

STANDARD TRAVERSE MEASUREMENTS

Traverse Points	*Requirement Dist. from Inside Wall*	Length (ft-in)
1	*16.7%*	0' 3-2/4"
2	*50.0%*	0' 8-3/4"
3	*83.3%*	1' 2"

SHORT TRAVERSE MEASUREMENTS

Traverse Points	*Requirement Dist. from Inside Wall*	Length (ft-in)
1	*0.4 m*	
2	*1.2 m*	
3	*2.0 m*	

STANDARD Traverse Used

Distance of Traverse Points From Inside Wall

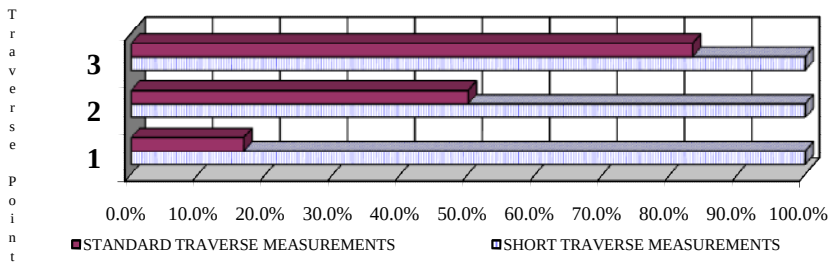

Calibration Error Test at Run 1 . STRATA Version 2.01

Operator:	RMC Environmental, Inc.			
Plant Name:	WM-Skyine RDF			
Location:	Eng 4 Testing			
	Reference Cylinder Numbers			
	Zero	Low-range	Mid-range	High-range
O2-A	CC208529		CC179563	CC147760
CO-A	CC208529	CC10309	CC10518	SG9198829
NOx-A	CC179563	CC86991	CC208529	CC177437

Date/Time	2/24/2011	13:37:13	PASSED
Analyte	O2-A	CO-A	NOx-A
Units	%	ppm	ppm
Zero Ref Cyl	0.00	0.00	0.00
Zero Avg	0.13	9.50	3.91
Zero Error%	0.60	1.00	1.60
Low Ref Cyl		255.80	51.34
Low Avg		258.60	54.21
Low Error%		0.30	1.10
Mid Ref Cyl	12.48	502.80	119.20
Mid Avg	12.31	504.30	117.12
Mid Error%	0.80	0.20	0.80
High Ref Cyl	20.85	1004.00	256.90
High Avg	21.11	998.20	254.25
High Error%	1.30	0.60	1.10

Initial System Bias Check for Run 1 . STRATA Version 2.01

Operator:	RMC Environmental, Inc.	
Plant Name:	WM-Skyine RDF	
Location:	Eng 4 Testing	
	Reference Cylinder Numbers	
	Zero	Span
O2-A	CC208529	CC179563
CO-A	CC208529	CC10518
NOx-A	CC179563	CC208529

Date/Time	2/24/2011	13:41:52	PASSED
Analyte	O2-A	CO-A	NOx-A
Units	%	ppm	ppm
Zero Ref Cyl	0.00	0.00	0.00
Zero Cal	0.13	9.50	3.91
Zero Avg	0.14	9.00	8.23
Zero Bias%	0.00	0.10	1.70
Zero Drift%			
Span Ref Cyl	12.48	502.80	119.20
Span Cal	12.31	504.30	117.12
Span Avg	12.24	498.40	118.07
Span Bias%	0.30	0.60	0.40
Span Drift%			

Test Run 1 Begin. STRATA Version 2.01
Operator: RMC Environmental, Inc.
Plant Name: WM-Skyine RDF
Location: Eng 4 Testing

		O2-A	CO-A	NOx-A
		%	ppm	ppm
Begin calculating run averages				
2/24/2011	14:01:03	8.449	624	87.46
2/24/2011	14:02:02	8.349	627.9	87.51
2/24/2011	14:03:02	8.311	635.4	87.84
2/24/2011	14:04:02	8.316	639.2	87.95
2/24/2011	14:05:02	8.309	633.4	86.14
2/24/2011	14:06:02	8.303	635	86.43
2/24/2011	14:07:01	8.294	641.4	88.31
2/24/2011	14:08:01	8.323	639.4	89.25
2/24/2011	14:09:01	8.338	637	88.52
2/24/2011	14:10:03	8.304	632.9	87.2
2/24/2011	14:11:02	8.329	637.4	88.29
2/24/2011	14:12:02	8.328	634.4	88.16
2/24/2011	14:13:02	8.323	632.7	87.09
2/24/2011	14:14:02	8.292	635.6	87.57
2/24/2011	14:15:01	8.307	639.9	88.09
2/24/2011	14:16:01	8.309	638.7	87.83
2/24/2011	14:17:01	8.294	643.2	88.81
2/24/2011	14:18:03	8.309	645.8	89.83
2/24/2011	14:19:03	8.303	642.7	88.54
2/24/2011	14:20:02	8.306	640.5	88.23
Begin Traverse				
2/24/2011	14:21:02	8.309	641.9	88.6
2/24/2011	14:22:02	8.294	639.5	88.38
2/24/2011	14:23:01	8.322	644.6	89.56
2/24/2011	14:24:01	8.302	638.6	88.16
2/24/2011	14:25:02	8.312	643.8	89.35
2/24/2011	14:26:02	8.313	640.1	88.81
2/24/2011	14:27:01	8.283	639.3	87.86
2/24/2011	14:28:01	8.288	646.3	89.24
2/24/2011	14:29:01	8.314	645.7	90.06
2/24/2011	14:30:01	8.3	636.8	87.72
2/24/2011	14:31:02	8.28	643.7	88.51
2/24/2011	14:32:02	8.296	647.7	90.13
2/24/2011	14:33:02	8.302	640.1	87.55
2/24/2011	14:34:01	8.304	639.4	87.99
2/24/2011	14:35:03	8.289	638.4	86.65
2/24/2011	14:36:02	8.279	643	88.03
2/24/2011	14:37:02	8.313	641.5	88.8
2/24/2011	14:38:01	8.28	637.5	87.93
2/24/2011	14:39:03	8.272	644.1	88.68
2/24/2011	14:40:02	8.313	643.4	88.92
Begin Traverse				
2/24/2011	14:41:02	8.282	637.4	87.56

2/24/2011	14:42:01	8.286	640.4	88.05
2/24/2011	14:43:01	8.28	641.8	88.52
2/24/2011	14:44:02	8.289	640.9	88.22
2/24/2011	14:45:02	8.282	638.6	87.47
2/24/2011	14:46:01	8.278	639.6	87.48
2/24/2011	14:47:01	8.286	644.1*	89.38
2/24/2011	14:48:01	8.295	638.7	88.57
2/24/2011	14:49:03	8.3	634.9	87.08
2/24/2011	14:50:02	8.282	633.8	86.44
2/24/2011	14:51:02	8.321	639.3	88.63
2/24/2011	14:52:01	8.325	632.3	88.27
2/24/2011	14:53:01	8.275	628.3	85.44
2/24/2011	14:54:03	8.308	639.3	88.55
2/24/2011	14:55:02	8.297	633.5	88.01
2/24/2011	14:56:02	8.288	636.2	88.04
2/24/2011	14:57:02	8.305	640.8	88.79
2/24/2011	14:58:01	8.348	636.8	89.51
2/24/2011	14:59:01	8.34	629.3	88.34
2/24/2011	15:00:03	8.316	629	87.54
Average of Test Run		O2-A	CO-A	NOx-A
		%	ppm	ppm
2/24/2011	15:00:03	8.306	638.4*	88.16

Test Run 1 End

Final System Bias Check for Run 1 . STRATA Version 2.01

Operator:	RMC Environmental, Inc.	
Plant Name:	WM-Skyine RDF	
Location:	Eng 4 Testing	
	Reference Cylinder Numbers	
	Zero	Span
O2-A	CC208529	CC179563
CO-A	CC208529	CC10518
NOx-A	CC179563	CC208529

Date/Time	2/24/2011	15:03:43	PASSED
Analyte	O2-A	CO-A	NOx-A
Units	%	ppm	ppm
Zero Ref Cyl	0.00	0.00	0.00
Zero Cal	0.13	9.50	3.91
Zero Avg	0.09	10.10	8.45
Zero Bias%	0.20	0.10	1.80
Zero Drift%	-0.20	0.10	0.10
Span Ref Cyl	12.48	502.80	119.20
Span Cal	12.31	504.30	117.12
Span Avg	12.12	503.00	118.73
Span Bias%	0.90	0.10	0.60
Span Drift%	-0.60	0.50	0.30
Ini Zero Avg	0.14	9.00	8.23
Ini Span Avg	12.24	498.40	118.07
Run Avg	8.31	638.40	88.16
Co	0.11	9.50	8.34
Cm	12.18	500.70	118.40
Correct Avg	8.48	643.80	86.45

Test Run 2 Begin. STRATA Version 2.01
Operator: RMC Environmental, Inc.
Plant Name: WM-Skyine RDF
Location: Eng 4 Testing

Begin calculating run averages

		O2-A	CO-A	NOx-A
		%	ppm	ppm
2/24/2011	15:07:05	8.49	598.8	85.72
2/24/2011	15:08:05	8.562	630	93.46
2/24/2011	15:09:05	8.659	621	96.72
2/24/2011	15:10:05	8.58	598.6	90.37
2/24/2011	15:11:04	8.479	607.8	85.68
2/24/2011	15:12:04	8.625	639.9	97.82
2/24/2011	15:13:04	8.681	612.8	96.34
2/24/2011	15:14:04	8.579	592.4	89.08
2/24/2011	15:15:04	8.522	614.3	89.17
2/24/2011	15:16:03	8.673	632.6	99.99
2/24/2011	15:17:03	8.605	597.8	91.71
2/24/2011	15:18:05	8.519	607.1	86.69
2/24/2011	15:19:05	8.653	635.3	99.13
2/24/2011	15:20:05	8.663	605.1	94.12
2/24/2011	15:21:05	8.582	598.6	89.05
2/24/2011	15:22:04	8.571	616.3	90.36
2/24/2011	15:23:04	8.697	623.7	97.61
2/24/2011	15:24:04	8.611	595.1	90.6
2/24/2011	15:25:04	8.538	604.7	87.9
2/24/2011	15:26:04	8.612	627.4	95.48
2/24/2011	15:27:03	8.72	625.9	99.29
2/24/2011	15:28:05	8.721	598.4	95.23
2/24/2011	15:29:05	8.585	591.1	87.15
2/24/2011	15:30:05	8.654	624.7	95.86
2/24/2011	15:31:05	8.748	618.1	100.58
2/24/2011	15:32:04	8.741	598.8	94.54
2/24/2011	15:33:04	8.744	596	95.36
2/24/2011	15:34:04	8.596	584.8	85.74
2/24/2011	15:35:04	8.558	614.4	90.65
2/24/2011	15:36:03	8.674	634.2	98.56
2/24/2011	15:37:05	8.77	611.3	99.22
2/24/2011	15:38:05	8.703	592.5	93.9
2/24/2011	15:39:05	8.58	596	87.49
2/24/2011	15:40:05	8.593	622.8	93.26
2/24/2011	15:41:04	8.723	630.5	101.24
2/24/2011	15:42:04	8.756	603.3	97.69
2/24/2011	15:43:04	8.629	587.5	87.84
2/24/2011	15:44:04	8.598	611.4	90.55
2/24/2011	15:45:03	8.717	628.4	99.17
2/24/2011	15:46:03	8.782	607.4	98.78
2/24/2011	15:47:05	8.702	588.5	91.81
2/24/2011	15:48:05	8.575	597.5	87.55
2/24/2011	15:49:04	8.618	624.8	94.88

2/24/2011	15:50:04	8.735	627.7	100.94
2/24/2011	15:51:04	8.769	601	96.79
2/24/2011	15:52:04	8.66	588.1	91.07
2/24/2011	15:53:04	8.58	607.6	89.19
2/24/2011	15:54:05	8.679	629.5	97.82
2/24/2011	15:55:05	8.793	613.6	100.49
2/24/2011	15:56:05	8.67	586.5	89.85
2/24/2011	15:57:05	8.578	606.2	89.49
2/24/2011	15:58:05	8.652	631.4	96.78
2/24/2011	15:59:05	8.76	630.7	102.94
2/24/2011	16:00:04	8.734	603.6	96.5
2/24/2011	16:01:04	8.603	598.4	88.74
2/24/2011	16:02:04	8.655	628.9	95.81
2/24/2011	16:03:03	8.771	624.8	102.9
2/24/2011	16:04:05	8.726	599.7	96.46
2/24/2011	16:05:05	8.598	597.2	88.13
2/24/2011	16:06:05	8.637	622.5	94.04
Average of Test Run		O2-A	CO-A	NOx-A
		%	ppm	ppm
2/24/2011	16:06:05	8.65	610.7	93.85

Test Run 2 End

Final System Bias Check for Run 2 . STRATA Version 2.01

Operator:	RMC Environmental, Inc.	
Plant Name:	WM-Skyine RDF	
Location:	Eng 4 Testing	
	Reference Cylinder Numbers	
	Zero	Span
O2-A	CC208529	CC179563
CO-A	CC208529	CC10518
NOx-A	CC179563	CC208529

Date/Time	2/24/2011	16:10:10	PASSED
Analyte	O2-A	CO-A	NOx-A
Units	%	ppm	ppm
Zero Ref Cyl	0.00	0.00	0.00
Zero Cal	0.13	9.50	3.91
Zero Avg	0.51	8.80	12.82
Zero Bias%	1.80	0.10	3.60
Zero Drift%	2.00	-0.10	1.70
Span Ref Cyl	12.48	502.80	119.20
Span Cal	12.31	504.30	117.12
Span Avg	12.59	500.80	119.45
Span Bias%	1.30	0.30	0.90
Span Drift%	2.30	-0.20	0.30
Ini Zero Avg	0.09	10.10	8.45
Ini Span Avg	12.12	503.00	118.73
Run Avg	8.65	610.70	93.85
Co	0.30	9.40	10.64
Cm	12.35	501.90	119.09
Correct Avg	8.65	613.90	91.46

Test Run 3 Begin. STRATA Version 2.01
Operator: RMC Environmental, Inc.
Plant Name: WM-Skyine RDF
Location: Eng 4 Testing

Begin calculating run averages

		O2-A	CO-A	NOx-A
		%	ppm	ppm
2/24/2011	16:12:24	8.81	608.5	99.14
2/24/2011	16:13:23	8.757	590.8	94.99
2/24/2011	16:14:23	8.623	592.5	88.28
2/24/2011	16:15:23	8.661	623.7	95.16
2/24/2011	16:16:22	8.778	626.2	102.52
2/24/2011	16:17:22	8.74	596.4	96.71
2/24/2011	16:18:24	8.598	605.7	91.08
2/24/2011	16:19:23	8.682	628.9	99
2/24/2011	16:20:23	8.818	623.5	104.74
2/24/2011	16:21:23	8.836	598.8	98.79
2/24/2011	16:22:22	8.774	588.2	95.25
2/24/2011	16:23:22	8.645	591.5	88.39
2/24/2011	16:24:24	8.638	618.3	93.25
2/24/2011	16:25:23	8.751	638.5	102.55
2/24/2011	16:26:23	8.854	613.2	103.11
2/24/2011	16:27:23	8.853	593.1	97.87
2/24/2011	16:28:23	8.708	583.4	88.04
2/24/2011	16:29:22	8.666	612.9	90.76
2/24/2011	16:30:22	8.776	625.9	97.71
2/24/2011	16:31:24	9.088	611.8	101.13
2/24/2011	16:32:23	9.54	587.8	95.35
2/24/2011	16:33:23	9.241	591.3	89.78
2/24/2011	16:34:23	9.029	620.3	98.23
2/24/2011	16:35:22	9.307	609.9	102.35
2/24/2011	16:36:22	9.141	592.1	97.74
2/24/2011	16:37:24	8.761	579.9	88.94
2/24/2011	16:38:24	8.739	604.2	90.89
2/24/2011	16:39:23	9.149	622.7	100.3
2/24/2011	16:40:23	9.564	602.4	100.69
2/24/2011	16:41:23	9.431	580.6	90.1
2/24/2011	16:42:23	9.357	601.7	90.77
2/24/2011	16:43:23	9.439	616.3	98.6
2/24/2011	16:44:22	9.515	599.5	100.66
2/24/2011	16:45:22	9.383	576.8	92.29
2/24/2011	16:46:22	9.274	593.7	88.56
2/24/2011	16:47:24	9.337	617.6	96.77
2/24/2011	16:48:23	9.463	609.4	102.71
2/24/2011	16:49:23	9.345	582.7	93.25
2/24/2011	16:50:23	9.248	597.8	89.99
2/24/2011	16:51:23	9.351	621.5	100.52
2/24/2011	16:52:22	9.413	597.1	99.99
2/24/2011	16:53:22	9.277	578.3	88.83
2/24/2011	16:54:24	9.236	606.8	92.65

2/24/2011	16:55:24	9.348	622.3	101.51
2/24/2011	16:56:23	9.392	593.8	97.92
2/24/2011	16:57:23	9.213	579.2	88.35
2/24/2011	16:58:23	9.19	608.3	92.76
2/24/2011	16:59:23	9.299	616.5	103.89
2/24/2011	17:00:22	9.15	587.4	96.98
2/24/2011	17:01:22	8.895	580.7	88.57
2/24/2011	17:02:22	8.89	608.6	93.41
2/24/2011	17:03:24	9.003	611.6	100.53
2/24/2011	17:04:23	9.003	590.8	96.21
2/24/2011	17:05:23	8.852	586.5	87.69
2/24/2011	17:06:23	9.011	619	98.92
2/24/2011	17:07:23	9.255	587.5	99.99
2/24/2011	17:08:22	9.091	557.8	86.97
2/24/2011	17:09:22	9.057	585.2	90.18
2/24/2011	17:10:24	9.127	599.3	99.4
2/24/2011	17:11:24	9.15	582.7	98.57
Average of Test Run		O2-A	CO-A	NOx-A
		%	ppm	ppm
2/24/2011	17:11:24	9.058	601.4	95.67

Test Run 3 End

Final System Bias Check for Run 3 . STRATA Version 2.01

Operator:	RMC Environmental, Inc.	
Plant Name:	WM-Skyine RDF	
Location:	Eng 4 Testing	
	Reference Cylinder Numbers	
	Zero	Span
O2-A	CC208529	CC179563
CO-A	CC208529	CC10518
NOx-A	CC179563	CC208529

Date/Time	2/24/2011	17:16:14	PASSED
Analyte	O2-A	CO-A	NOx-A
Units	%	ppm	ppm
Zero Ref Cyl	0.00	0.00	0.00
Zero Cal	0.13	9.50	3.91
Zero Avg	0.52	9.70	15.17
Zero Bias%	1.90	0.00	4.50
Zero Drift%	0.10	0.10	0.90
Span Ref Cyl	12.48	502.80	119.20
Span Cal	12.31	504.30	117.12
Span Avg	12.46	501.30	120.58
Span Bias%	0.70	0.30	1.40
Span Drift%	-0.60	0.10	0.50
Ini Zero Avg	0.51	8.80	12.82
Ini Span Avg	12.59	500.80	119.45
Run Avg	9.06	601.40	95.67
Co	0.51	9.20	13.99
Cm	12.52	501.10	120.01
Correct Avg	8.88	605.30	91.83

Calibration Error Test at Run 4 . STRATA Version 2.01

Operator: RMC Environmental, Inc.
Plant Name: WM-Skyine RDF
Location: Eng 4 Testing

Reference Cylinder Numbers

	Zero	Low-range	Mid-range	High-range
O2-A	CC208529		CC179563	CC147760
CO-A	CC179563	CC10309	CC10518	SG9198829
NOx-A	CC179563	CC86991	CC208529	CC177437
O2-B	CC208529		CC179563	CC147760
NOx-B	CC179563	CC86991	CC208529	CC177437
CO-B	CC179563	CC10309	CC10518	SG9198829

Date/Time 2/25/2011 8:33:30 PASSED

Analyte	O2-A	CO-A	NOx-A	O2-B	NOx-B	CO-B
Units	%	ppm	ppm	%	ppm	ppm
Zero Ref Cyl	0.00	0.00	0.00	0.00	0.00	0.00
Zero Avg	0.01	9.40	4.83	-0.02	0.10	9.50
Zero Error%	0.10	0.90	1.90	0.10	0.00	0.90
Low Ref Cyl		255.80	51.34		51.34	255.80
Low Avg		252.20	53.69		52.74	270.90
Low Error%		0.40	0.90		0.60	1.50
Mid Ref Cyl	12.48	502.80	119.20	12.48	119.20	502.80
Mid Avg	12.78	507.80	119.70	12.84	119.02	495.60
Mid Error%	1.40	0.50	0.20	1.70	0.10	0.70
High Ref Cyl	20.85	1004.00	256.90	20.85	256.90	1004.00
High Avg	20.88	999.00	255.03	20.81	254.15	1001.90
High Error%	0.20	0.50	0.70	0.20	1.10	0.20

Initial System Bias Check for Run 4 . STRATA Version 2.01

Operator: RMC Environmental, Inc.
Plant Name: WM-Skyine RDF
Location: Eng 4 Testing

Reference Cylinder Numbers

	Zero	Span
O2-A	CC208529	CC179563
CO-A	CC179563	CC10518
NOx-A	CC179563	CC208529
O2-B	CC208529	CC179563
NOx-B	CC179563	CC208529
CO-B	CC179563	CC10518

Date/Time 2/25/2011 8:41:26 PASSED

Analyte	O2-A	CO-A	NOx-A	O2-B	NOx-B	CO-B
Units	%	ppm	ppm	%	ppm	ppm
Zero Ref Cyl	0.00	0.00	0.00	0.00	0.00	0.00
Zero Cal	0.01	9.40	4.83	-0.02	0.10	9.50
Zero Avg	0.04	19.50	5.14	-0.02	0.12	19.20
Zero Bias%	0.10	1.00	0.10	0.00	0.00	1.00
Zero Drift%						
Span Ref Cyl	12.48	502.80	119.20	12.48	119.20	502.80
Span Cal	12.78	507.80	119.70	12.84	119.02	495.60
Span Avg	12.49	508.30	120.12	12.95	123.47	507.80
Span Bias%	1.40	0.00	0.20	0.50	1.80	1.20
Span Drift%						

Test Run 4 Begin. STRATA Version 2.01
Operator: RMC Environmental, Inc.
Plant Name: WM-Skyine RDF
Location: Eng 4 Testing

		O2-A	CO-A	NOx-A	O2-B	NOx-B	CO-B
		%	ppm	ppm	%	ppm	ppm
Begin calculating run averages							
2/25/2011	9:01:15	8.465	568.4	79.25	7.689	74.69	631.1
2/25/2011	9:02:15	8.436	567	77.8	7.689	73.94	632.1
2/25/2011	9:03:14	8.412	573	80.4	7.689	74.21	636
2/25/2011	9:04:14	8.389	583.7	84.6	7.622	75.69	639.2
2/25/2011	9:05:15	8.407	580.3	84.8	7.631	76.97	638.2
2/25/2011	9:06:15	8.425	573.8	82.9	7.615	76.05	636.7
2/25/2011	9:07:14	8.422	573.4	81.59	7.59	75.55	637
2/25/2011	9:08:14	8.425	572.6	81.72	7.59	75.63	635.7
2/25/2011	9:09:15	8.435	570.7	81.17	7.59	75.17	634.7
2/25/2011	9:10:15	8.443	568.4	79.9	7.59	74.67	635.2
2/25/2011	9:11:14	8.426	567	79.66	7.589	75	636.2
2/25/2011	9:12:16	8.438	559.5	78.96	7.589	76.14	635.9
2/25/2011	9:13:15	8.441	558.5	79.24	7.589	76.04	633
2/25/2011	9:14:15	8.442	556.8	77.45	7.589	75.95	635
2/25/2011	9:15:14	8.437	554.3	76.4	7.589	76.02	632.9
2/25/2011	9:16:16	8.443	558.6	77.75	7.588	76.49	636.7
2/25/2011	9:17:15	8.448	560.2	78.21	7.588	77.39	639.9
2/25/2011	9:18:15	8.459	556	77.69	7.592	77.22	633.7
2/25/2011	9:19:14	8.452	556.6	76.61	7.588	75.51	633.5
2/25/2011	9:20:15	8.454	555.8	76.79	7.588	75.37	633.3
Begin Traverse							
2/25/2011	9:21:15	8.446	557.9	76.79	7.588	75.39	633.7
2/25/2011	9:22:14	8.44	560.8	78.11	7.587	75.26	632
2/25/2011	9:23:15	8.455	560.9	79.39	7.588	75.04	631.5
2/25/2011	9:24:15	8.499	557.4	77.77	7.588	74.12	632.5
2/25/2011	9:25:14	8.748	557.3	78.24	7.587	74.99	635.1
2/25/2011	9:26:14	8.756	557.1	78.07	7.587	75.21	632.2
2/25/2011	9:27:15	8.745	556.7	77.49	7.587	74.99	633
2/25/2011	9:28:15	8.747	558.8	77.47	7.587	74.89	637
2/25/2011	9:29:14	8.752	555.5	76.8	7.587	75.51	633.1
2/25/2011	9:30:16	8.744	557.3	76.76	7.587	73.94	631.6
2/25/2011	9:31:15	8.746	558.2	77.6	7.587	74.51	633.6
2/25/2011	9:32:15	8.736	556.6	77.14	7.586	74.96	636.2
2/25/2011	9:33:14	8.734	560.2	77.71	7.587	75.22	634.6
2/25/2011	9:34:15	8.723	557	77.2	7.587	75.5	632.7
2/25/2011	9:35:15	8.728	558.9	78.55	7.587	75.36	633.2
2/25/2011	9:36:14	8.715	559.6	78.42	7.586	75.3	633
2/25/2011	9:37:15	8.714	558.5	77.95	7.586	75.19	633.8
2/25/2011	9:38:15	8.715	561.4	79.84	7.586	75.68	638.9
2/25/2011	9:39:14	8.723	555.6	77.47	7.586	75.95	630.7
2/25/2011	9:40:16	8.714	558	77.7	7.586	74.56	633.8
Begin Traverse							
2/25/2011	9:41:15	8.717	557.8	77.54	7.586	75.58	631.3

2/25/2011	9:42:15	8.707	559.6	77.6	7.586	74.95	634.2
2/25/2011	9:43:14	8.711	568.7	80.21	7.586	75.5	631.1
2/25/2011	9:44:15	8.703	571.2	80.89	7.586	74.97	631.8
2/25/2011	9:45:15	8.697	570.2	81.42	7.586	75.2	632.5
2/25/2011	9:46:14	8.677	571.3	81.39	7.586	75	624.8
2/25/2011	9:47:15	8.688	575.3	83.92	7.586	75.37	615
2/25/2011	9:48:15	8.678	573.6	82.45	7.586	75.91	613.1
2/25/2011	9:49:14	8.663	572.6	82.19	7.586	75.09	609
2/25/2011	9:50:15	8.668	575.8	82.95	7.586	74.55	610.4
2/25/2011	9:51:15	8.672	572.5	81.7	7.586	74.16	609.6
2/25/2011	9:52:14	8.67	576.1	83.25	7.585	74.64	617
2/25/2011	9:53:15	8.669	574.3	82.93	7.586	76.18	615.3
2/25/2011	9:54:15	8.678	570.2	82.07	7.585	75.03	608.3
2/25/2011	9:55:14	8.676	570.8	81.03	7.585	73.53	612.2
2/25/2011	9:56:16	8.671	569.5	81.14	7.585	73.78	611.4
2/25/2011	9:57:15	8.688	559.1	79.51	7.585	74.21	611.9
2/25/2011	9:58:14	8.691	555.7	77.68	7.585	74.17	612.1
2/25/2011	9:59:16	8.697	555.8	77.25	7.585	74.18	611.4
2/25/2011	10:00:15	8.694	556.9	77.79	7.585	74.54	614.2

Average of Test Run		O2-A	CO-A	NOx-A	O2-B	NOx-B	CO-B
		%	ppm	ppm	%	ppm	ppm
2/25/2011	10:00:15	8.6	563.9	79.41	7.594	75.2	628.9

Test Run 4 End

Final System Bias Check for Run 4 . STRATA Version 2.01

Operator:	RMC Environmental, Inc.	
Plant Name:	WM-Skyine RDF	
Location:	Eng 4 Testing	
	Reference Cylinder Numbers	
	Zero	Span
O2-A	CC208529	CC179563
CO-A	CC179563	CC10518
NOx-A	CC179563	CC208529
O2-B	CC208529	CC179563
NOx-B	CC179563	CC208529
CO-B	CC179563	CC10518

Date/Time	2/25/2011	10:04:48	PASSED			
Analyte	O2-A	CO-A	NOx-A	O2-B	NOx-B	CO-B
Units	%	ppm	ppm	%	ppm	ppm
Zero Ref Cyl	0.00	0.00	0.00	0.00	0.00	0.00
Zero Cal	0.01	9.40	4.83	-0.02	0.10	9.50
Zero Avg	0.27	9.90	4.68	-0.02	1.85	9.30
Zero Bias%	1.20	0.00	0.10	0.00	0.70	0.00
Zero Drift%	1.10	-1.00	-0.20	0.00	0.70	-1.00
Span Ref Cyl	12.48	502.80	119.20	12.48	119.20	502.80
Span Cal	12.78	507.80	119.70	12.84	119.02	495.60
Span Avg	12.69	509.80	118.56	12.74	119.58	508.80
Span Bias%	0.40	0.20	0.50	0.50	0.20	1.30
Span Drift%	1.00	0.20	-0.60	-1.00	-1.60	0.10
Ini Zero Avg	0.04	19.50	5.14	-0.02	0.12	19.20
Ini Span Avg	12.49	508.30	120.12	12.95	123.47	507.80
Run Avg	8.60	563.90	79.41	7.59	75.20	628.90
Co	0.16	14.70	4.91	-0.02	0.99	14.30
Cm	12.59	509.00	119.34	12.84	121.52	508.30
Correct Avg	8.48	558.60	77.60	7.39	73.39	625.60

Test Run 5 Begin. STRATA Version 2.01
Operator: RMC Environmental, Inc.
Plant Name: WM-Skyine RDF
Location: Eng 4 Testing

		O2-A	CO-A	NOx-A	O2-B	NOx-B	CO-B
		%	ppm	ppm	%	ppm	ppm
Begin calculating run averages							
2/25/2011	10:08:39	8.677	554.2	78.01	7.585	72.63	611.5
2/25/2011	10:09:39	8.68	557.2	78.38	7.585	72.85	608.7
2/25/2011	10:10:38	8.684	554.7	77.39	7.585	72.65	611.8
2/25/2011	10:11:38	8.695	558.4	78.13	7.584	73.91	612.7
2/25/2011	10:12:39	8.704	556.5	78.2	7.585	73.61	612.8
2/25/2011	10:13:39	8.705	555.4	77.62	7.585	74	611.4
2/25/2011	10:14:38	8.707	556.7	77.91	7.585	73.42	614.3
2/25/2011	10:15:38	8.707	555.4	78.15	7.585	74.94	614.4
2/25/2011	10:16:39	8.721	552.6	76.56	7.584	74.73	612.6
2/25/2011	10:17:39	8.722	550.6	76.14	7.585	74.94	611
2/25/2011	10:18:38	8.727	551.6	75.74	7.585	74.59	611.1
2/25/2011	10:19:40	8.86	557.1	78.89	7.584	75.03	614.3
2/25/2011	10:20:39	9.47	555	77.14	7.584	75.33	611.1
2/25/2011	10:21:38	9.15	558.3	78.68	7.584	74.64	614.1
2/25/2011	10:22:38	8.669	553.4	77.04	7.57	75.21	612.5
2/25/2011	10:23:39	8.624	557.1	77.87	7.574	74.97	616.2
2/25/2011	10:24:39	8.604	559	77.8	7.584	74.85	612.4
2/25/2011	10:25:38	8.611	561.6	79.81	7.584	75.13	618.4
2/25/2011	10:26:38	8.635	559.2	79.54	7.584	76.78	618.5
2/25/2011	10:27:39	9.149	555.3	76.67	7.584	75.44	614.5
2/25/2011	10:28:39	9.276	554.9	77.04	7.584	75.34	613.3
2/25/2011	10:29:38	9.255	557.1	77.76	7.584	75.3	616.2
2/25/2011	10:30:40	8.956	560.3	78.64	7.584	75.34	613.8
2/25/2011	10:31:39	8.651	560	78.66	7.583	75.48	613.2
2/25/2011	10:32:38	8.618	559.6	76.96	7.566	74.14	612.3
2/25/2011	10:33:38	8.625	560.3	78.97	7.583	75.06	615.8
2/25/2011	10:34:39	8.61	558.9	78.02	7.583	75.09	613.2
2/25/2011	10:35:38	8.626	557.2	77.28	7.576	75.06	613
2/25/2011	10:36:40	8.751	559	78.37	7.573	74.65	615.1
2/25/2011	10:37:39	9.162	559.4	78.22	7.583	75.28	614.4
2/25/2011	10:38:38	9.085	563.5	80.07	7.583	76.11	617
2/25/2011	10:39:40	8.938	557.9	77.85	7.583	76.28	613.2
2/25/2011	10:40:39	8.678	556.5	76.89	7.583	75.43	610.5
2/25/2011	10:41:38	8.623	557.5	77	7.582	75.35	611.3
2/25/2011	10:42:40	8.599	557.6	76.93	7.546	74.46	608.6
2/25/2011	10:43:39	8.563	570.3	82.85	7.486	75.41	624
2/25/2011	10:44:39	8.6	565.6	82.54	7.572	78.61	618.5
2/25/2011	10:45:38	8.595	560.9	79.38	7.582	76.09	611
2/25/2011	10:46:39	8.597	560.2	78.43	7.542	74.8	610.1
2/25/2011	10:47:39	8.599	563	80.22	7.562	75.04	617.2
2/25/2011	10:48:38	8.597	561.3	79.34	7.582	76.04	617.9
2/25/2011	10:49:39	8.598	562.7	80.34	7.582	76.82	614.6
2/25/2011	10:50:38	8.601	559	78.36	7.582	76.41	615.1

2/25/2011	10:51:38	8.597	558.1	77.62	7.581	75.78	612.5
2/25/2011	10:52:39	8.603	559.5	78.96	7.582	75.33	613.9
2/25/2011	10:53:38	8.593	557.4	78.32	7.578	75.17	613.5
2/25/2011	10:54:40	8.602	558.1	78.59	7.538	75	612.1
2/25/2011	10:55:39	8.595	554.6	77.19	7.529	74.69	611.8
2/25/2011	10:56:38	8.587	557.8	77.46	7.526	75.35	604.8
2/25/2011	10:57:40	8.584	561.5	78.97	7.535	75.61	604.6
2/25/2011	10:58:39	8.583	561.8	79.32	7.581	76.38	604.1
2/25/2011	10:59:38	8.589	564	80.12	7.581	76.31	602.3
2/25/2011	11:00:40	8.582	563.3	79.35	7.581	75.18	602
2/25/2011	11:01:39	8.576	562.2	79.13	7.581	75.52	604.2
2/25/2011	11:02:38	8.583	563	79.79	7.581	75.65	600.9
2/25/2011	11:03:40	8.581	560.7	78.97	7.581	74.94	603.7
2/25/2011	11:04:39	8.581	561.3	79.72	7.581	75.61	604.2
2/25/2011	11:05:38	8.587	557.2	77.93	7.581	75.91	600
2/25/2011	11:06:39	8.584	559.6	79.43	7.58	75.38	604.2
2/25/2011	11:07:39	8.576	558	78.05	7.58	75.61	603.4

Average of Test Run		O2-A	CO-A	NOx-A	O2-B	NOx-B	CO-B
		%	ppm	ppm	%	ppm	ppm
2/25/2011	11:07:39	8.711	558.7	78.41	7.575	75.18	611.6

Test Run 5 End

Final System Bias Check for Run 5 . STRATA Version 2.01

Operator: RMC Environmental, Inc.
Plant Name: WM-Skyine RDF
Location: Eng 4 Testing

Reference Cylinder Numbers

	Zero	Span
O2-A	CC208529	CC179563
CO-A	CC179563	CC10518
NOx-A	CC179563	CC208529
O2-B	CC208529	CC179563
NOx-B	CC179563	CC208529
CO-B	CC179563	CC10518

Date/Time 2/25/2011 11:15:39 PASSED

Analyte	O2-A	CO-A	NOx-A	O2-B	NOx-B	CO-B
Units	%	ppm	ppm	%	ppm	ppm
Zero Ref Cyl	0.00	0.00	0.00	0.00	0.00	0.00
Zero Cal	0.01	9.40	4.83	-0.02	0.10	9.50
Zero Avg	0.24	9.20	6.68	-0.02	3.01	7.10
Zero Bias%	1.10	0.00	0.70	0.00	1.20	0.20
Zero Drift%	-0.10	-0.10	0.80	0.00	0.50	-0.20
Span Ref Cyl	12.48	502.80	119.20	12.48	119.20	502.80
Span Cal	12.78	507.80	119.70	12.84	119.02	495.60
Span Avg	12.51	509.20	117.84	12.83	121.65	513.30
Span Bias%	1.30	0.10	0.70	0.10	1.00	1.80
Span Drift%	-0.80	-0.10	-0.30	0.40	0.80	0.50
Ini Zero Avg	0.27	9.90	4.68	-0.02	1.85	9.30
Ini Span Avg	12.69	509.80	118.56	12.74	119.58	508.80
Run Avg	8.71	558.70	78.41	7.58	75.18	611.60
Co	0.26	9.50	5.68	-0.02	2.43	8.20
Cm	12.60	509.50	118.20	12.79	120.61	511.00
Correct Avg	8.55	552.20	77.05	7.40	73.37	603.30

Test Run 6 Begin. STRATA Version 2.01
Operator: RMC Environmental, Inc.
Plant Name: WM-Skyine RDF
Location: Eng 4 Testing

Begin calculating run averages

		O2-A %	CO-A ppm	NOx-A ppm	O2-B %	NOx-B ppm	CO-B ppm
2/25/2011	11:18:09	8.599	569.1	83.64	7.641	70.96	599.6
2/25/2011	11:19:09	8.603	569.6	82.69	7.58	73.45	602.8
2/25/2011	11:20:08	8.602	567.9	81.77	7.605	75.01	604.6
2/25/2011	11:21:08	8.606	569.4	81.69	7.604	75.39	600.8
2/25/2011	11:22:09	8.62	574.1	83.54	7.678	76	603.7
2/25/2011	11:23:09	8.64	572.4	83.71	7.671	76.24	600.3
2/25/2011	11:24:08	8.647	570.2	81.65	7.675	75.61	597.8
2/25/2011	11:25:08	8.649	571	82.78	7.58	74.76	596.5
2/25/2011	11:26:09	8.653	571.7	82.64	7.58	75.28	602.5
2/25/2011	11:27:09	8.652	574.6	84.15	7.58	76.79	604.3
2/25/2011	11:28:08	8.691	574.8	85.18	7.604	77.75	603.3
2/25/2011	11:29:08	8.701	570.2	82.55	7.58	76.85	600
2/25/2011	11:30:09	8.736	569.4	82.31	7.579	76.04	594.4
2/25/2011	11:31:09	8.968	568	81.86	7.579	74.86	594
2/25/2011	11:32:08	9.186	568.3	81.38	7.579	75.14	601.4
2/25/2011	11:33:08	9.204	572.6	83.31	7.579	76.91	596.9
2/25/2011	11:34:09	9.157	572	82.99	7.579	74.98	594.6
2/25/2011	11:35:09	9.003	570	81.56	7.561	74.5	595.6
2/25/2011	11:36:08	8.801	573.1	83.16	7.579	75.6	604.3
2/25/2011	11:37:08	8.704	570.3	83.69	7.579	77.86	598.3
2/25/2011	11:38:09	8.601	569.4	82.24	7.579	76.57	597.7
2/25/2011	11:39:09	8.594	571.3	83.79	7.58	77.95	600.3
2/25/2011	11:40:08	8.579	568.5	83.38	7.579	77.93	599.6
2/25/2011	11:41:10	8.566	567.1	81.99	7.579	77.35	596.9
2/25/2011	11:42:09	8.575	568.7	82.7	7.653	77.85	598.7
2/25/2011	11:43:08	8.566	567	82.09	7.678	78	594.5
2/25/2011	11:44:08	8.562	566.3	80.79	7.625	76.59	588.8
2/25/2011	11:45:09	8.554	570.1	82.5	7.579	75.73	597.2
2/25/2011	11:46:09	8.562	569.5	83.85	7.58	77.23	595.1
2/25/2011	11:47:08	8.565	566.6	81.58	7.579	75.37	596.1
2/25/2011	11:48:09	8.574	569.2	82.76	7.579	76.27	597.6
2/25/2011	11:49:09	8.601	569.8	83.41	7.601	76.91	598.7
2/25/2011	11:50:08	8.946	567.6	82.15	7.579	76.74	594.6
2/25/2011	11:51:10	9.154	567.8	81.69	7.579	74.91	592
2/25/2011	11:52:09	8.875	568.1	82.61	7.579	74.36	592.2
2/25/2011	11:53:08	8.765	568.3	81.19	7.579	73.9	597.4
2/25/2011	11:54:10	8.583	572.4	83	7.579	76.05	605.1
2/25/2011	11:55:09	8.596	570	82.86	7.579	77.67	596.9
2/25/2011	11:56:08	8.653	568.9	81.6	7.579	76.18	592
2/25/2011	11:57:10	8.575	572.5	83.56	7.579	75.54	597
2/25/2011	11:58:09	8.554	572.5	83.03	7.579	76.46	596.7
2/25/2011	11:59:08	8.543	572.1	83.78	7.579	76.77	599.4
2/25/2011	12:00:10	8.549	572.6	84.76	7.592	78.24	601.9

2/25/2011	12:01:09	8.544	571.4	83.46	7.586	78.5	596.2
2/25/2011	12:02:08	8.559	570.1	84.08	7.673	78.33	594.5
2/25/2011	12:03:09	8.552	568.9	83.3	7.609	76.76	587.8
2/25/2011	12:04:09	8.549	570.1	83.48	7.579	74.92	592.3
2/25/2011	12:05:08	8.543	569.7	83.01	7.579	74.69	592.7
2/25/2011	12:06:09	8.56	569.1	82.52	7.579	74.92	596
2/25/2011	12:07:08	8.562	569.8	83.25	7.578	75.7	591.8
2/25/2011	12:08:10	8.533	570	82.28	7.579	75.68	575.9
2/25/2011	12:09:09	8.563	571.7	83.59	7.579	77.41	571.8
2/25/2011	12:10:08	8.562	570.6	83.1	7.578	75.73	569.7
2/25/2011	12:11:09	8.578	573.1	83.98	7.579	75.19	572
2/25/2011	12:12:09	8.587	571.8	84.12	7.578	75.82	574
2/25/2011	12:13:08	8.611	570.2	83.62	7.578	76.84	575
2/25/2011	12:14:09	8.709	565	81.76	7.578	75.87	569.7
2/25/2011	12:15:09	8.718	565.5	81.6	7.577	74.6	573.5
2/25/2011	12:16:08	8.71	565.3	82.07	7.576	75.72	573.9
2/25/2011	12:17:10	8.948	567	82.13	7.576	76.02	575.5
Average of Test Run		O2-A	CO-A	NOx-A	O2-B	NOx-B	CO-B
		%	ppm	ppm	%	ppm	ppm
2/25/2011	12:17:10	8.675	569.9	82.82	7.592	76.05	593.4

Test Run 6 End

Final System Bias Check for Run 6 . STRATA Version 2.01

Operator: RMC Environmental, Inc.
Plant Name: WM-Skyine RDF
Location: Eng 4 Testing

Reference Cylinder Numbers

	Zero	Span
O2-A	CC208529	CC179563
CO-A	CC179563	CC10518
NOx-A	CC179563	CC208529
O2-B	CC208529	CC179563
NOx-B	CC179563	CC208529
CO-B	CC179563	CC10518

Date/Time 2/25/2011 12:21:58 PASSED

Analyte	O2-A	CO-A	NOx-A	O2-B	NOx-B	CO-B
Units	%	ppm	ppm	%	ppm	ppm
Zero Ref Cyl	0.00	0.00	0.00	0.00	0.00	0.00
Zero Cal	0.01	9.40	4.83	-0.02	0.10	9.50
Zero Avg	0.26	9.60	7.73	-0.02	4.21	7.00
Zero Bias%	1.20	0.00	1.20	0.00	1.60	0.20
Zero Drift%	0.10	0.00	0.40	0.00	0.50	0.00
Span Ref Cyl	12.48	502.80	119.20	12.48	119.20	502.80
Span Cal	12.78	507.80	119.70	12.84	119.02	495.60
Span Avg	12.37	508.80	117.03	12.56	118.56	507.30
Span Bias%	1.90	0.10	1.10	1.40	0.20	1.20
Span Drift%	-0.70	0.00	-0.30	-1.30	-1.20	-0.60
Ini Zero Avg	0.24	9.20	6.68	-0.02	3.01	7.10
Ini Span Avg	12.51	509.20	117.84	12.83	121.65	513.30
Run Avg	8.68	569.90	82.82	7.59	76.05	593.40
Co	0.25	9.40	7.21	-0.02	3.61	7.10
Cm	12.44	509.00	117.44	12.70	120.10	510.30
Correct Avg	8.62	564.10	81.76	7.47	74.13	585.80

ORSAT FIELD DATA

Plant Name Skyline RDF - Ferris, Tx

Sampling Location Eq. #4

Run and/or Sample No. 1 Leak Test? ok Date 2/24/11 Operator RC

Time of Sample Collection	Time of Analysis	CO_2 Reading A	O_2 Reading B	CO Reading C	% O_2 B-A	% CO C-B	% N_2 100-C
1410	1412	11.3					
1430	1434	11.2	CEMS				
1450	1455	11.4					
	Avg.	11.3		Avg.			

Run and/or Sample No. 2 Leak Test? ok Date 2/24/11 Operator RC

Time of Sample Collection	Time of Analysis	CO_2 Reading A	O_2 Reading B	CO Reading C	% O_2 B-A	% CO C-B	% N_2 100-C
1515	1518	11.0					
1530	1540	11.0	CEMS				
1548	1553	11.1					
	Avg.	11.0		Avg.			

Run and/or Sample No. 3 Leak Test? ok Date 2/24/11 Operator RC

Time of Sample Collection	Time of Analysis	CO_2 Reading A	O_2 Reading B	CO Reading C	% O_2 B-A	% CO C-B	% N_2 100-C
1620	1625	10.9					
1640	1643	10.7	CEMS				
1655	1659	10.6					
	Avg.	10.7		Avg.			

ORSAT FIELD DATA

Plant Name Skyline RDF - Ferris Tx

Sampling Location Eng #1 & #2

Run and/or Sample No. 1 Leak Test? C Date 2/25/11 Operator M

unit #1

Time of Sample Collection	Time of Analysis	CO_2 Reading A	O_2 Reading B	CO Reading C	% O_2 B-A	% CO C-B	% N_2 100-C
900	910	11.3					
930	935	11.1	CEMS				
950	955	11.5					
	Avg.	11.3		Avg.			

Run and/or Sample No. 1 Leak Test? ok Date 2/25/11 Operator C

unit #2

Time of Sample Collection	Time of Analysis	CO_2 Reading A	O_2 Reading B	CO Reading C	% O_2 B-A	% CO C-B	% N_2 100-C
905	912	11.3					
925	938	11.2	CEMS				
945	948	11.4					
	Avg.	11.3		Avg.			

Run and/or Sample No. 2 Leak Test? ok Date 2/25/11 Operator C

Eng #1

Time of Sample Collection	Time of Analysis	CO_2 Reading A	O_2 Reading B	CO Reading C	% O_2 B-A	% CO C-B	% N_2 100-C
1010	1015	11.1					
1025	1030	11.0	CEMS				
1055	1100	10.9					
	Avg.	11.0		Avg.			

ORSAT FIELD DATA

Plant Name Skyline RDF

Sampling Location Eng #1 & #2

Run and/or Sample No. 2 Leak Test? ok Date 2/25/11 Operator C

Eng #2

Time of Sample Collection	Time of Analysis	CO_2 Reading A	O_2 Reading B	CO Reading C	% O_2 B-A	% CO C-B	% N_2 100-C
1010	1014	11.3					
1035	1038	11.3					
1050	1056	11.2					
	Avg.	11.3		Avg.			

Run and/or Sample No. 3 Leak Test? ok Date 2/25/11 Operator C

Eng #1

Time of Sample Collection	Time of Analysis	CO_2 Reading A	O_2 Reading B	CO Reading C	% O_2 B-A	% CO C-B	% N_2 100-C
1120	1125 10.7 →	10.7					
1140	1145 10.6 →	10.6	CEMS				
1200	1205 10.8 →	10.8					
C	Avg.	10.7		Avg.			

Run and/or Sample No. 3 Leak Test? ok Date 2/25/11 Operator C

Eng #2

Time of Sample Collection	Time of Analysis	CO_2 Reading A	O_2 Reading B	CO Reading C	% O_2 B-A	% CO C-B	% N_2 100-C
1010	1015	11.1					
1035	1040	11.4	CEMS				
1050	1057	11.3					
	Avg.	11.3		Avg.			

APPENDIX C. TEST QA/ QC FORMS

Calibration Gas Certificates of Analysis

Meterbox Calibrations

Pitot Calibrations

Airgas

Airgas Specialty Gases
12722 S. Wentworth Avenue
Chicago, IL 60628
1-773-785-3000
FAX: 1-773-785-1928
www.airgas.com

CERTIFICATE OF ANALYSIS
Grade of Product: EPA Protocol

Part Number:	E03NI61E15A2839	Reference Number:	54-124193110-4
Cylinder Number:	CC147760	Cylinder Volume:	158 Cu.Ft.
Laboratory:	ASG - Chicago - IL	Cylinder Pressure:	2015 PSIG
Analysis Date:	Oct 06, 2009	Valve Outlet:	590

Expiration Date: Oct 06, 2012

Certification performed in accordance with "EPA Traceability Protocol (Sept. 1997)" using the assay procedures listed. Analytical Methodology does not require correction for analytical interferences. This cylinder has a total analytical uncertainty as stated below with a confidence level of 95%. There are no significant impurities which affect the use of this calibration mixture. All concentrations are on a volume/volume basis unless otherwise noted.
Do Not Use This Cylinder below 150 psig i.e. 1 Mega Pascal

ANALYTICAL RESULTS

Component	Requested Concentration	Actual Concentration	Protocol Method	Total Relative Uncertainty
CARBON DIOXIDE	17.50 %	16.98 %	G1	+/- 1% NIST Traceable
OXYGEN	20.80 %	20.85 %	G1	+/- 1% NIST Traceable
NITROGEN	Balance			

CALIBRATION STANDARDS

Type	Lot ID	Cylinder No	Concentration	Expiration Date
NTRM/O2	60608	CC206109	22.51% OXYGEN/NITROGEN	May 01, 2010
NTRM/CO2	40604	XC034327B	19.84% CARBON DIOXIDE/	May 15, 2012

ANALYTICAL EQUIPMENT

Instrument/Make/Model	Analytical Principle	Last Multipoint Calibration
HORIBA 510	NDIR	Sep 21, 2009
HORIBA MPA-510	Paramagnetic	Sep 21, 2009

Triad Data Available Upon Request

Notes:

QA Approval

Airgas

Airgas Speciality Gases
12722 S. Wentworth Avenue
Chicago, IL 60628
1-773-785-3000
FAX 1-773-785-1928
http://www.airgas.com

CERTIFICATE OF ANALYSIS
Grade of Product: EPA Protocol

Part Number:	E03NI78E15A56Y2	Reference Number:	54-124224926-2
Cylinder Number:	CC179563	Cylinder Volume:	151 Cu.Ft.
Laboratory:	ASG - Chicago - IL	Cylinder Pressure:	2015 PSIG
Analysis Date:	Jul 02, 2010	Valve Outlet:	590

Expiration Date: Jul 02, 2013

Certification performed in accordance with "EPA Traceability Protocol (Sept. 1997)" using the assay procedures listed. Analytical Methodology does not require correction for analytical interferences. This cylinder has a total analytical uncertainty as stated below with a confidence level of 95%. There are no significant impurities which affect the use of this calibration mixture. All concentrations are on a volume/volume basis unless otherwise noted.
Do Not Use This Cylinder below 150 psig.i.e. 1 Mega Pascal

ANALYTICAL RESULTS

Component	Requested Concentration	Actual Concentration	Protocol Method	Total Relative Uncertainty
CARBON DIOXIDE	9.500 %	9.443 %	G1	+/- 1% NIST Traceable
OXYGEN	12.50 %	12.48 %	G1	+/- 1% NIST Traceable
NITROGEN	Balance			

CALIBRATION STANDARDS

Type	Lot ID	Cylinder No	Concentration	Expiration Date
NTRM/CO2	1	CC59142	13.78% CARBON DIOXIDE/	Oct 02, 2012
NTRM/O2	981202	CC73607	14.84% OXYGEN/	Oct 02, 2012

ANALYTICAL EQUIPMENT

Instrument/Make/Model	Analytical Principle	Last Multipoint Calibration
(CO2-1)HORIBA VIA-510	NDIR	Jun 03, 2010
(O2-1)HORIBA MPA-510	Paramagnetic	Jun 03, 2010

Triad Data Available Upon Request

Notes:

Approved for Release

Airgas

Airgas Specialty Gases
12722 S. Wentworth Avenue
Chicago, IL 60628
1-773-785-3000
FAX: 1-773-785-1928
www.airgas.com

CERTIFICATE OF ANALYSIS
Grade of Product: EPA Protocol

Part Number:	E02NI99E15A3168	Reference Number:	54-124218515-3
Cylinder Number:	SG9128607BAL	Cylinder Volume:	144 Cu.Ft.
Laboratory:	ASG - Chicago - IL	Cylinder Pressure:	2015 PSIG
Analysis Date:	May 17, 2010	Valve Outlet:	350

Expiration Date: May 17, 2013

Certification performed in accordance with "EPA Traceability Protocol (Sept. 1997)" using the assay procedures listed. Analytical Methodology does not require correction for analytical interferences. This cylinder has a total analytical uncertainty as stated below with a confidence level of 95%. There are no significant impurities which affect the use of this calibration mixture. All concentrations are on a volume/volume basis unless otherwise noted.
Do Not Use This Cylinder below 150 psig.i.e. 1 Mega Pascal

ANALYTICAL RESULTS

Component	Requested Concentration	Actual Concentration	Protocol Method	Total Relative Uncertainty
CARBON MONOXIDE	500.0 PPM	499.2 PPM	G1	+/- 1% NIST Traceable
NITROGEN	Balance			

CALIBRATION STANDARDS

Type	Lot ID	Cylinder No	Concentration	Expiration Date
NTRM/CO	09060427	CC286630	501.3PPM CARBON MONOXIDE/	Feb 01, 2013

ANALYTICAL EQUIPMENT

Instrument/Make/Model	Analytical Principle	Last Multipoint Calibration
(FTIR-1)Nicolet Nexus	FTIR	May 14, 2010

Triad Data Available Upon Request

Notes:

Approved for Release

Airgas.

CERTIFICATE OF ANALYSIS
Grade of Product: EPA Protocol

Part Number:	E03NI99E15A0391	Reference Number:	54-124193110-6
Cylinder Number:	CC177437	Cylinder Volume:	144 Cu.Ft.
Laboratory:	ASG - Chicago - IL	Cylinder Pressure:	2015 PSIG
Analysis Date:	Oct 08, 2009	Valve Outlet:	660

Expiration Date: Oct 08, 2011

Certification performed in accordance with "EPA Traceability Protocol (Sept. 1997)" using the assay procedures listed. Analytical Methodology does not require correction for analytical interferences. This cylinder has a total analytical uncertainty as stated below with a confidence level of 95%. There are no significant impurities which affect the use of this calibration mixture. All concentrations are on a volume/volume basis unless otherwise noted.
Do Not Use This Cylinder below 150 psig.i.e. 1 Mega Pascal

ANALYTICAL RESULTS

Component	Requested Concentration	Actual Concentration	Protocol Method	Total Relative Uncertainty
NITRIC OXIDE	250.0 PPM	256.8 PPM	G1	+/- 1% NIST Traceable
SULFUR DIOXIDE	250.0 PPM	249.5 PPM	G1	+/- 1% NIST Traceable
NITROGEN	Balance			
Total oxides of nitrogen		256.9 PPM		For Reference Only

CALIBRATION STANDARDS

Type	Lot ID	Cylinder No	Concentration	Expiration Date
NTRM/SO2	08061603	CC254551	247PPM SULFUR DIOXIDE/	Oct 15, 2012
NTRM/NO	1	CC286544	250.6PPM NITRIC OXIDE/NITROGEN	Feb 01, 2011

ANALYTICAL EQUIPMENT

Instrument/Make/Model	Analytical Principle	Last Multipoint Calibration
(FTIR-3)Thermo 6700	FTIR	Sep 29, 2009
(FTIR-3)Thermo 6700	FTIR	Sep 29, 2009

Triad Data Available Upon Request

Notes:

Signature on file

QA Approval

Airgas

Airgas Specialty Gases
12722 S. Wentworth Avenue
Chicago, IL 60628
1-773-785-3000
FAX: 1-773-785-1928
www.airgas.com

CERTIFICATE OF ANALYSIS
Grade of Product: EPA Protocol

Part Number:	E03NI99E15A01Q4	Reference Number:	54-124218515-5
Cylinder Number:	CC208529	Cylinder Volume:	144 Cu.Ft.
Laboratory:	ASG - Chicago - IL	Cylinder Pressure:	2015 PSIG
Analysis Date:	May 18, 2010	Valve Outlet:	660

Expiration Date: May 18, 2012

Certification performed in accordance with "EPA Traceability Protocol (Sept. 1997)" using the assay procedures listed. Analytical Methodology does not require correction for analytical interferences. This cylinder has a total analytical uncertainty as stated below with a confidence level of 95%. There are no significant impurities which affect the use of this calibration mixture. All concentrations are on a volume/volume basis unless otherwise noted.
Do Not Use This Cylinder below 150 psig.i.e. 1 Mega Pascal

ANALYTICAL RESULTS

Component	Requested Concentration	Actual Concentration	Protocol Method	Total Relative Uncertainty
NITRIC OXIDE	115.0 PPM	119.2 PPM	G1	+/- 1% NIST Traceable
SULFUR DIOXIDE	115.0 PPM	114.0 PPM	G1	+/- 1% NIST Traceable
NITROGEN	Balance			
Total oxides of nitrogen		119.2 PPM		For Reference Only

CALIBRATION STANDARDS

Type	Lot ID	Cylinder No	Concentration	Expiration Date
NTRM/SO2	8061603	CC255249	247PPM SULFUR DIOXIDE/	Oct 15, 2012
NTRM/NO	090603	CC287366	250.6PPM NITRIC OXIDE/NITROGEN	Feb 01, 2011

ANALYTICAL EQUIPMENT

Instrument/Make/Model	Analytical Principle	Last Multipoint Calibration
(FTIR-3)Thermo 6700	FTIR	May 14, 2010
(FTIR-3)Thermo 6700	FTIR	May 14, 2010

Triad Data Available Upon Request

Notes:

Aust Stewart

Approved for Release

Airgas

Airgas Specialty Gases
12722 S. Wentworth Avenue
Chicago, IL 60628
1-773-785-3000
FAX: 1-773-785-1928
www.airgas.com

CERTIFICATE OF ANALYSIS
Grade of Product: EPA Protocol

Part Number:	E02NI99E15A0101	Reference Number:	54-124176834-1
Cylinder Number:	SG9198829BAL	Cylinder Volume:	144 Cu.Ft.
Laboratory:	ASG - Chicago - IL	Cylinder Pressure:	2015 PSIG
Analysis Date:	May 12, 2009	Valve Outlet:	350

Expiration Date: May 12, 2012

Certification performed in accordance with "EPA Traceability Protocol (Sept. 1997)" using the assay procedures listed. Analytical Methodology does not require correction for analytical interferences. This cylinder has a total analytical uncertainty as stated below with a confidence level of 95%. There are no significant impurities which affect the use of this calibration mixture. All concentrations are on a volume/volume basis unless otherwise noted.
Do Not Use This Cylinder below 150 psig i.e. 1 Megapascal

ANALYTICAL RESULTS

Component	Requested Concentration	Actual Concentration	Protocol Method	Total Relative Uncertainty
CARBON MONOXIDE	1000 PPM	1004 PPM	G1	+/- 1% NIST Traceable
NITROGEN	Balance			

CALIBRATION STANDARDS

Type	Lot ID	Cylinder No	Concentration	Expiration Date
NTRM/CO	80604	CC255866	1002.4PPM CARBON MONOXIDE/NITROGEN	Apr 15, 2012

ANALYTICAL EQUIPMENT

Instrument/Make/Model	Analytical Principle	Last Multipoint Calibration
Nicolet Nexus	FTIR	May 06, 2009

Triad Data Available Upon Request

Notes:

QA Approval

Airgas

Airgas Speciality Gases
12722 S. Wentworth Avenue
Chicago, IL 60628
1-773-785-3000
FAX: 1-773-785-1928
www.airgas.com

CERTIFICATE OF ANALYSIS
Grade of Product: EPA Protocol

Part Number:	E02NI99E15A3168	Reference Number:	54-124152573-3
Cylinder Number:	CC10518	Cylinder Volume:	144 Cu.Ft.
Laboratory:	ASG - Chicago - IL	Cylinder Pressure:	2015 PSIG
Analysis Date:	Sep 30, 2008	Valve Outlet:	580

Expiration Date: Sep 30, 2011

Certification performed in accordance with "EPA Traceability Protocol (Sept. 1997)" using the assay procedures listed. Analytical Methodology does not require correction for analytical interferences. This cylinder has a total analytical uncertainty as stated below with a confidence level of 95%. There are no significant impurities which affect the use of this calibration mixture. All concentrations are on a volume/volume basis unless otherwise noted.
Do Not Use This Cylinder below 150 psig.i.e. 1 Mega Pascal

ANALYTICAL RESULTS

Component	Requested Concentration	Actual Concentration	Protocol Method	Total Relative Uncertainty
CARBON MONOXIDE	500.0 PPM	502.8 PPM	G1	+/- 1% NIST Traceable
NITROGEN	Balance			

CALIBRATION STANDARDS

Type	Lot ID	Cylinder No	Concentration	Expiration Date
NTRM/CO	5120510	CC179949	495.8PPM CARBON MONOXIDE/	Feb 02, 2009

ANALYTICAL EQUIPMENT

Instrument/Make/Model	Analytical Principle	Last Multipoint Calibration
Nicolet Nexus	FTIR	Sep 08, 2008

Triad Data Available Upon Request

Notes:

QA Approval

Airgas

CERTIFICATE OF ANALYSIS
Grade of Product: EPA Protocol

Airgas Specialty Gases
6421 Mondova Road
Maumee, OH 43537-9760
(419) 893-7226
FAX: (419) 893-2963
www.airgas.com

Part Number:	E02NI99E15A0080	Reference Number:	113-124136020-8
Cylinder Number:	CC10309	Cylinder Volume:	144 Cu.Ft.
Laboratory:	ASG - Maumee - OH	Cylinder Pressure:	2015 PSIG
Analysis Date:	May 08, 2008	Valve Outlet:	350

Expiration Date: May 08, 2011

Certification performed in accordance with "EPA Traceability Protocol (Sept. 1997)" using the assay procedures listed. Analytical Methodology does not require correction for analytical interferences. This cylinder has a total analytical uncertainty as stated below with a confidence level of 95%. There are no significant impurities which affect the use of this calibration mixture. All concentrations are on a volume/volume basis unless otherwise noted.
Do Not Use This Cylinder below 150 psig i.e. 1 Mega Pascal

ANALYTICAL RESULTS

Component	Requested Concentration	Actual Concentration	Protocol Method	Total Relative Uncertainity
CARBON MONOXIDE	250.0 PPM	255.8 PPM	G1	+/- 1% NIST Traceable
NITROGEN	Balance			

CALIBRATION STANDARDS

Type	Lot ID	Cylinder No	Concentration	Expiration Date
NTRM	051204	CC180009	99.43PPM CARBON MONOXIDE/NITROGEN	Feb 02, 2009
NTRM	051205	CC180694	495.6PPM CARBON MONOXIDE/NITROGEN	Feb 02, 2009

ANALYTICAL EQUIPMENT

Instrument/Make/Model	Analytical Principle	Last Multipoint Calibration
022-Horiba VIA-510	NDIR	Apr 16, 2008

Triad Data Available Upon Request

Notes:

QA Approval

SAMPLING EQUIPMENT AUDIT

Plant Name Skyline RDF Job No. 2011-15029

City/State Ferris, TX Auditor(s) AMD

Test Loc. Eng 4 2 & 1 Date 2/24/11

BAROMETER

In-House Ref. Barometer 30.29 "Hg vs Field Barometer 30.32 "Hg

Date Compared 2/20/11 Dev. 0.03 "Hg (Max. Allowable Dev.: ± 0.1 "Hg)

Field Barometric Pressure Corrected for Test Location Elevation? (√) ✓

(Note: deduct 0.1" Hg from local NWS *STATION* pressure for each 100' of test location elevation; example: 29.6 - (300'/100 * 0.1) = 29.3" Hg.)

2/24/11

Ref. Therm. Initial Ambient Temp., °F 90

		Allowable Deviation From Ambient	Ambient Temperature, °F				Audit OK (√)
	THERMOMETERS *						
5-6	Dry Gas Meter	± 5.4 °F	91	(Meterbox No. 003)			✓
4	Impinger Exit	± 2.0 °F	90	90	90		✓
	Filter Box	± 5.4 °F	N/A				

* Adjust thermometer until acceptable. If it cannot be adjusted, use as back-up. If no backup, record ambient temperature indicated by unadjusted thermometer and label with correction factor (indicate):

THERMOCOUPLES Allowable Deviation from Ambient: ± 8.0°F* (± 2.0°F)**

TC No. / °F	OK √	TC No. / °F	OK √	TC No. / °F	OK √	TC No. / °F	OK √	TC No. / °F	OK √
1 / 90	✓	2 / 91	✓	/		/		/	

* ± 8.0 °F = ± 1.5% of ambient absolute temperature.
** (± 2.0 °F if used in saturated or water droplet-laden gas stream.)

ISOKINETIC METERBOX I.D. 003 Gamma (Y) ~~0.00~~ 1.001 ΔH@ 1.772

As Applicable (check): Zero Magnehelics? N/A Zero/Level Manometer? ✓

Barometric Pressure (P_{bar}) 29.85 Auditor AMD Date 2/24/11

Dry Gas Meter Reading (Cubic Ft.)	Meter Temperature (°F)	Lower and Upper Limits for Audit Gamma
Final 237.864	Final 95	0.96 * Y = 0.961
Initial 214.680	Initial 103	1.04 * Y = 1.041

Dry Gas Volume Metered (Cubic Ft.)	Average Meter Temp. (°F)	Run Time (Base = 10) (Minutes)	(Seconds)
Vm = 23.184	Tm = 99	30	—

0.75 = Ideal Sampling Rate

$$Y_c = \frac{[\text{Min.} + (\text{Sec.} / 60)]}{Vm} * \left[\frac{\{[(29.92) / (460 + 68) * (0.75)^2] * (Tm + 460)\}}{P_{bar}}\right]^{.5}$$

$$Y_c = \frac{[____ + (____ / 60)]}{____} * \left[\frac{0.0319\ (____ + 460)}{____}\right]^{.5} = \underset{\text{Audit Gamma}}{1.0001}$$

Audit Gamma Acceptable (between lower & upper limits)? (√) ✓ Yes ___ No

F-1113 rev. 7-92

PreTest Meterbox Audit

Plant:	WM-Skyline RDF	**Test Date:**	02/24/11
Location:	Engines 4, 1 & 2	**Auditor:**	AMD/RC
		Project #:	2011-15029

Meterbox I.D.:	003	**Level Manometer:**	Yes
Gamma:	1.001	**Zero Manometer:**	Yes
Delta H@	1.772	**Barometric Pressure:**	29.83

	Audit Time (Min)	Dry Gas Meter Reading (Ft^3)	Dry Gas Meter Temperature (^oF)
Initial Readings =	0.0	214.680	95
Final Readings =	30.0	237.864	103

Run Time (Minutes) **Theta** =	30
Gas Volume Sampled $\mathbf{V_m}$ =	23.1840
Average $\mathbf{T_m}$ =	99.0

	Audit Gamma Limits
Lower Gamma Limit **LGL**=	*0.96 * Y =* 0.961
Upper Gamma Limit **UGL**=	*1.04 * Y =* 1.041

Audit Gamma $\mathbf{Y_c}$ =	**1.0001**
Meter Box Audit =	**Passed**

Ideal Sampling Rate = 0.75

$$Y_c = (Theta / V_m) * [\{ (29.92 / (460 + 68) * 0.75^2) * (T_m + 460) \} / P_{bar}]^{0.5}$$

Passed = LGL < Y_c < UGL

Failed = LGL > Y_c or Y_c > UGL

Audit Performed By: _____

NO2-NO CONVERSION EFFICIENCY

RMCEInc-Air Monitoring Division

Manufacture/ Model: TECO 42i-HL
Serial Number: 42iHL-ANSBPCC

Instrument Span: 250
Date Of Test: 2/24/11

RESULTS		
Peak response recorded during converter efficiency test:	23.03	ppm
Response recorded at the end of the 30-minute test:	22.81	ppm
Percent decrease from the peak response:	0.96%	
Converter Efficiency:	**99.04%**	

SPECIFICATIONS (EPA METHOD 7E): RESPONSE AT 30 MINUTES MUST NOT DECREASE BY MORE THAN 2% OF THE PEAK RESPONSE VALUE.

NO2-NO CONVERTER EFFICIENCY TEST PROCEDURES

RMCEInc-AMD followed the manufacturer's recommended set-up procedures contained in the analyzer manual. After the initial set-up procedures were completed, the electronics of the monitor were adjusted according to the manufacturer's guidelines. The monitor was then calibrated by flowing NO calibration gases into the instrument. A calibration gas was then diluted (1:1) with purified compressed air. The gas mixture was routed through a manifold into a Tedlar bag, which was previously leak tested and evacuated. This arrangement afforded sufficient volume to allow the sampling system to operate for the required 30 minutes. Immediately after the bag was filled, the manifold was connected to the sampling system. The system was turned on and the analyzer response was recorded on a data acquisition system. The one minute averages from the data acquisition system was analyzed for the peak response and the response at the end of the 30-minute sampling period.

S-TYPE PITOT TUBE INSPECTION

Project Number	**2011-15929**		
Pitot Tube Number	**M2-36-1**		
Level	Y	(Y/N)	PASS
Obstructions	N	(Y/N)	PASS
Damaged	N	(Y/N)	PASS
Type of material	SS		
-10 < alpha1 < +10	0.5	Degrees	PASS
-10 < alpha2 < +10	0.5	Degrees	PASS
-5 < Beta1 < +5	0.1	Degrees	PASS
-5 < Beta2 < +5	0.1	Degrees	PASS
z or Gamma	0.0	Degrees	
w or Theta	1.0	Degrees	
A	1.000	Inches	
{z = A Tan (Gamma)} < 0.125	0.000	Inches	PASS
{w = A Tan (Theta)} < 0.03125	0.027	Inches	PASS
$0.1875 < D_t < 0.375$	0.375	Inches	PASS
$1.05\ D_t < P_a < 1.5\ D_t$	0.500	Inches	PASS
$1.05\ D_t < P_b < 1.5\ D_t$	0.500	Inches	PASS
$\lvert P_a - P_b \rvert < 0.0625$	0.000	Inches	PASS
Distance T/C set back > 2.0	2.100	Inches	PASS

alpha1 & alpha 2	are the angles of deflection that faces of the pitot tube are off from the perpendicular line of the traverse axis.
Beta1 & Beta2	are the angles of deflection that faces of the pitot tube from the line parallel to the longitudinal tube axis.
Gamma	is the angle between the line between the two pitot tips and the theoretical level line between the tips.
Theta	is the angle between the two center lines of the pitot faces.
A	is the distance between the two pitot tips.
z	is the distance between the two lengths of the pitot tips.
w	is the distance between the two center lines of each of the pitot tubes.
D_t	is the outside diameter of the tubing used.
P_a & P_b	is the distance between the pitot tube face and the longitudinal tube axis.

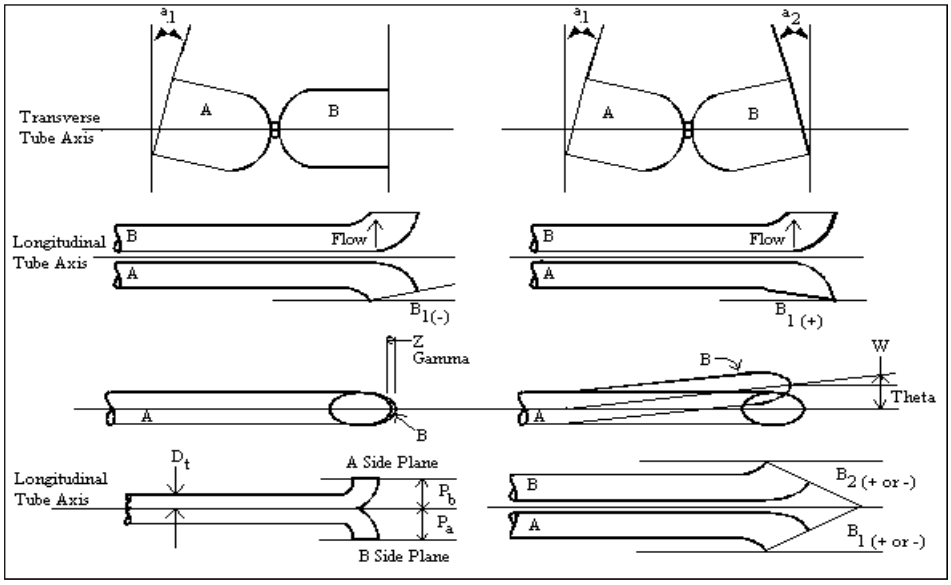

COMMENTS: _____

_____

_____

_____

I certify that this pitot tube meets or exceeds all specifications, criteria and/ or applicable design features and is hereby assigned a pitot tube calibration factor of 0.84.

Signature: _____

Date: _____

APPENDIX D. PROCESS DATA

PROCESS DATA

Company: Waste Management - Skyline
Source: Eng 4

DATE: 2/24/11

Calculated Data

Start Time		KW	Fuel Flow	Fuel Flow	Heating value	Heat Input	Heat Rate	Air Flow	BTU	CH4 %	O2 %	CO2 %	Hours	ENGINE #
				SCFM at 50% methane	Btu/scf HHV	MMBtu/hr LHV	But/kWhr LHV							
1400	Run 1	1591	601	649	466	15.14	9,515	4343	465.5	46.1	1.74	34.9	27871	4
1415		1533	602	650	466	15.16	9,891	4324	465.5					4
1430		1584	598	646	466	15.06	9,509	4236	465.5					4
1445		1604	604	652	466	15.21	9,485	4328	465.5					4
	Average	1578	601	649	466	15.14	9,600	4308	465.5					
1515	Run 2	1602	598	634	466	15.06	9,402	4318	465.1	46.1	1.74	34.9		4
1530		1605	596	632	466	15.01	9,353	4300	465.1					4
1545		1595	594	630	466	14.96	9,380	4389	465.1					4
1600		1601	589	624	466	14.84	9,266	4322	465.1					4
	Average	1601	594	630	466	14.97	9,350	4332	465.1					
1615	Run 3	1605	583	618	466	14.68	9,149	4268	465.1	46.1	1.74	34.9		4
1630		1615	576	611	466	14.51	8,983	4323	465.1					4
1645		1589	578	613	466	14.56	9,162	4375	465.1					4
1700		1598	581	616	466	14.63	9,158	4228	465.1					4
	Average	1602	580	614	466	14.60	9,113	4299	465.1					

Calculated:

Heat Input = mmBtu/Hr

$$\text{Heat Input} = \frac{HHV_{dry} * \text{Fuel Flow}}{1{,}000{,}000} \times 0.90$$

$$\text{Heat Input} = \frac{499 * (612*60)}{1{,}000{,}000} \times 0.90$$

Heat Input = 15.14 mmBtu/Hr

LHV used for Heat input calculations

PROCESS DATA

Company: Waste Management - Skyline
Source: Eng 1 & 2

DATE: 2/25/11

Calculated Data

Start Time		KW	Fuel Flow	Fuel Flow	Heating value	Heat Input	Heat Rate	Air Flow	BTU	CH4 %	O2 %	CO2 %	Hours	ENGINE #
				SCFM at 50% methane	Btu/scf HHV	MMBtu/hr LHV	But/kWhr LHV							
915	Run 1	1562	599	647	467	15.09	9,663	4333	465.1	46.1	1.75	34.9	27261	1
930		1626	590	637	467	14.87	9,143	4301	465.1					1
945		1580	575	621	467	14.49	9,170	4334	465.1					1
1000		1601	593	640	467	14.94	9,333	4381	465.1					1
	Average	1592	589	636	467	14.85	9,327	4337	465.1					
1015	Run 2	1595	572	606	466	14.41	9,033	4164	465.4	46.1	1.74	34.9		1
1030		1612	580	615	466	14.61	9,062	4217	465.4					1
1045		1605	579	614	466	14.58	9,086	4318	465.4					1
1100		1598	584	619	466	14.71	9,205	4159	465.4					1
	Average	1603	579	613	466	14.58	9,097	4215	465.4					
1115	Run 3	1589	583	618	466	14.68	9,241	4204	465.9	46.1	1.74	34.9		1
1130		1619	579	614	466	14.58	9,008	4181	465.9					1
1145		1593	569	603	466	14.33	8,997	4076	465.9					1
1200		1572	577	612	466	14.53	9,245	4171	465.9					1
	Average	1593	577	612	466	14.53	9,123	4158	465.9					
915	Run 1	1589	622	672	467	15.67	9,864	4291	465.1	46.1	1.75	34.9	27665	2
930		1596	624	674	467	15.72	9,852	4259	465.1					2
945		1575	620	670	467	15.62	9,919	4308	465.1					2
1000		1608	624	674	467	15.72	9,778	4255	465.1					2
	Average	1592	623	672	467	15.69	9,853	4278	465.1					
1015	Run 2	1595	620	657	466	15.62	9,791	4365	465.4	46.1	1.74	34.9		2
1030		1568	621	658	466	15.64	9,975	4328	465.4					2
1045		1574	622	659	466	15.67	9,953	4404	465.4					2
1100		1601	620	657	466	15.62	9,754	4396	465.4					2
	Average	1585	621	658	466	15.64	9,868	4373	465.4					
1115	Run 3	1548	620	657	466	15.62	10,088	4287	465.9	46.1	1.74	34.9		2
1130		1575	621	658	466	15.64	9,931	4324	465.9					2
1145		1592	618	655	466	15.57	9,777	4409	465.9					2
1200		1590	610	647	466	15.36	9,663	4309	465.9					2
	Average	1576	617	654	466	15.55	9,865	4281	465.9					

Calculated:

Heat Input = mmBtu/Hr

$$\text{Heat Input} = \frac{HHV_{dry} * \text{Fuel Flow}}{1{,}000{,}000} \times 0.90$$

$$\text{Heat Input} = \frac{499 * (612*60)}{1{,}000{,}000} \times 0.90$$

Heat Input = 15.09 mmBtu/Hr

LHV used for Heat input calculations

CORE LABORATORIES

201 Deerwood Glen Dr
Deer Park, TX 77536
281-478-1300

RMC Environmental Inc
Rachel Chleborowicz
9226 N 2nd Street
Machesney Park, IL 61115

Report Number : 57801- 110723
Date Reported: 3/11/2011
Date Received: 3/7/2011

Analytical Report

Sample No. 110723-001 **Sample ID Eng # 4** **Date Sampled 2/24/2011 3:00:0**
Skyline-2001-15028

Test	Result	Units	Method	Date	Analyst
Ultimate Gas Analysis					
Hydrogen	0.05	Mol %	ASTM D-1945	3/10/2011	KTN
Oxygen	1.09	Mol %			
Nitrogen	13.00	Mol %			
Carbon Dioxide	36.94	Mol %			
Methane	48.92	Mol %			
Ethane	<0.01	Mol %			
Propane	<0.01	Mol %			
Isobutane	<0.01	Mol %			
n-Butane	<0.01	Mol %			
Isopentane	<0.01	Mol %			
n-Pentane	<0.01	Mol %			
Hexanes Plus	<0.01	Mol %			
Total	100.00	Mol %			
Molecular Weight	28.1	Kg/Kg-mole	ASTM D-3588		
Molar Mass Ratio	0.97008				
Relative Density	0.97204				
Compressibility Factor	0.99731				
Gross Heating Value (Dry)	494.3	BTU/CF (Ideal)			
Gross Heating Value (Dry)	495.6	BTU/CF (Real)			
Net Heating Value (Dry)	445.0	BTU/CF (Ideal)			
Net Heating Value (Dry)	446.2	BTU/CF (Real)			
Pressure Base	14.696	psia			
Carbon Content	36.70	WT %	ASTM D-1945		
Hydrogen Content	7.02	WT %			
Oxygen Content	43.32	WT %			
Nitrogen Content	12.96	WT %			
Sulfur Content	<0.01	WT %			
F Factor @ 20C & 29.92 in.	9528	dscf/mmBTU			

The analytical results, opinions or interpretations contained in this report are based upon information and material supplied by the client for whose exclusive and confidential use this report has been made. The analytical results, opinions or interpretations expressed represent the best judgement of Core Laboratories. Core Laboratories, however, makes no warrant or representation, express or implied, of any type, and expressly disclaims same as to the productivity, proper operation or profitableness of any oil, gas, or other mineral property, well or sand in conjunction with which such report is used or relied upon for any reason whatsoever. This report shall not be reproduced, in whole or in part, without the approval of Core Laboratories.

CORE LABORATORIES

201 Deerwood Glen Dr
Deer Park, TX 77536
281-478-1300

RMC Environmental Inc
Rachel Chleborowicz
9226 N 2nd Street
Machesney Park, IL 61115

Report Number : 57801- 110723
Date Reported: 3/11/2011
Date Received: 3/7/2011

Analytical Report

Sample No. 110723-002 **Sample ID Eng # 1/2** **Date Sampled 2/25/2011 10:00:**
Skyline-2001-15028

Test	Result	Units	Method	Date	Analyst
Ultimate Gas Analysis					
Hydrogen	0.04	Mol %	ASTM D-1945	3/10/2011	KTN
Oxygen	1.07	Mol %			
Nitrogen	12.92	Mol %			
Carbon Dioxide	36.82	Mol %			
Methane	49.15	Mol %			
Ethane	<0.01	Mol %			
Propane	<0.01	Mol %			
Isobutane	<0.01	Mol %			
n-Butane	<0.01	Mol %			
Isopentane	<0.01	Mol %			
n-Pentane	<0.01	Mol %			
Hexanes Plus	<0.01	Mol %			
Total	100.00	Mol %			
Molecular Weight	28.1	Kg/Kg-mole	ASTM D-3588		
Molar Mass Ratio	0.96853				
Relative Density	0.97048				
Compressibility Factor	0.99731				
Gross Heating Value (Dry)	496.5	BTU/CF (Ideal)			
Gross Heating Value (Dry)	497.9	BTU/CF (Real)			
Net Heating Value (Dry)	447.1	BTU/CF (Ideal)			
Net Heating Value (Dry)	448.3	BTU/CF (Real)			
Pressure Base	14.696	psia			
Carbon Content	36.81	WT %	ASTM D-1945		
Hydrogen Content	7.07	WT %			
Oxygen Content	43.22	WT %			
Nitrogen Content	12.90	WT %			
Sulfur Content	<0.01	WT %			
F Factor @ 20C & 29.92 in.	9522	dscf/mmBTU			

The analytical results, opinions or interpretations contained in this report are based upon information and material supplied by the client for whose exclusive and confidential use this report has been made. The analytical results, opinions or interpretations expressed represent the best judgement of Core Laboratories. Core Laboratories, however, makes no warrant or representation, express or implied, of any type, and expressly disclaims same as to the productivity, proper operation or profitableness of any oil, gas, or other mineral property, well or sand in conjunction with which such report is used or relied upon for any reason whatsoever. This report shall not be reproduced, in whole or in part, without the approval of Core Laboratories.

CORE LABORATORIES

201 Deerwood Glen Dr
Deer Park, TX 77536
281-478-1300

RMC Environmental Inc
Rachel Chleborowicz
9226 N 2nd Street
Machesney Park, IL 61115

Report Number : 57801- 110723
Date Reported: 3/11/2011
Date Received: 3/7/2011

Analytical Report

Sample No. 110723-002 **Sample ID Eng # 1/2** **Date Sampled 2/25/2011 10:00:**
Skyline-2001-15028

Test	Result	Units	Method	Date	Analyst

Approved By: M. Jean Waits

The analytical results, opinions or interpretations contained in this report are based upon information and material supplied by the client for whose exclusive and confidential use this report has been made. The analytical results, opinions or interpretations expressed represent the best judgement of Core Laboratories. Core Laboratories, however, makes no warrant or representation, express or implied, of any type, and expressly disclaims same as to the productivity, proper operation or profitableness of any oil, gas, or other mineral property, well or sand in conjunction with which such report is used or relied upon for any reason whatsoever. This report shall not be reproduced, in whole or in part, without the approval of Core Laboratories.

CORE LABORATORIES

No. 25215

Core Lab
RESERVOIR OPTIMIZATION

Core Laboratories
201 Deerwood Glen Drive
Deer Park, TX 77536
Phone: 281-478-1300
Fax: 281-476-9209

CHAIN OF CUSTODY RECORD

CUSTOMER INFORMATION

COMPANY: RMC ENV, Inc
SEND REPORT TO: R. CHLEBOROWICZ
ADDRESS: 9226 N. 2nd St.
MACHESNEY PK, IL 61115
RMCE@AirMonitoring.com
PHONE: 815-378-6150
FAX: 815-425-1102

PROJECT INFORMATION

PROJECT NAME/NUMBER: SKYLINE-2011-15028

BILLING INFORMATION

BILL TO:
ADDRESS: PO Box 2131
Atlantic Beach, NC 28512
PHONE:
FAX:
PO NO.:

SAMPLE NO.	SAMPLE DESCRIPTION	SAMPLE DATE	SAMPLE TIME	SAMPLE MATRIX	CONTAINER	PRESERV.	NUMBER OF CONTAINERS	ANALYSIS / METHOD REQUEST: NH / Proximate Analysis	ANALYSIS / METHOD REQUEST: F-Factor Detention	LAB JOB NO.	REMARKS / PRECAUTIONS
1	ENG #4	2/24/11	300P	LFG	2195		1	✓	✓		
2	ENG #1/2	2/25/11	1000A	LFG	2196		1	✓	✓		

SAMPLER: R. CHLEBOROWICZ

SHIPMENT METHOD:

AIRBILL NO.:

REQUIRED TURNAROUND:* ☐ SAME DAY ☐ 24 HOURS ☐ 48 HOURS ☐ 72 HOURS ☐ 5 DAYS ☐ 10 DAYS ☑ ROUTINE OTHER

1. RELINQUISHED BY:	DATE	2. RELINQUISHED BY:	DATE	3. RELINQUISHED BY:	DATE
SIGNATURE: [signature]	2/25/11	SIGNATURE:		SIGNATURE:	
PRINTED NAME/COMPANY: R. CHLEBOROWICZ / RMCENV Inc	TIME 1745	PRINTED NAME/COMPANY:	TIME	PRINTED NAME/COMPANY:	TIME
1. RECEIVED BY:	DATE	2. RECEIVED BY:	DATE 3-7-11	3. RECEIVED BY:	DATE
SIGNATURE:		SIGNATURE: [signature]		SIGNATURE:	
PRINTED NAME/COMPANY:	TIME	PRINTED NAME/COMPANY:	TIME 12:31	PRINTED NAME/COMPANY:	TIME

* RUSH TURNAROUND MAY REQUIRE SURCHARGE

ORIGINAL

APPENDIX E. RESUMES OF TEST PERSONNEL

Rachel Chleborowicz-QSTI

Senior Technical Staff

Primary Role: Sr. Project Manager

Other Role(s): Source Testing
Ambient Monitoring
Laboratory Analysis
Emissions Factors Development
Regulatory Support
Data Analysis

Firm: RMC Environmental, Inc.

Level: Professional Level 4

Experience: 20 years

Education: BS, 1990, Biology and Chemistry, UNC-Chapel Hill

QSTI Certification - 2009

Basis for Selection:

- **Currently Sr. Project Manager on confidential clients' project to characterize air emissions from landfill gas engines around the country.**
- **Served as Sr. Program Manager on over 1250 compliance and source emissions tests encompassing over 12 different source categories.**
- **Managed more than 100 projects conducted to evaluate applicability of current AP-42 factors.**

Ms. Chleborowicz has specialized in source testing and ambient air monitoring for over 20 years. She is responsible for administrative and technical management of RMC Environmental, Inc., a woman owned source testing company headquartered in Chicago, Illinois. Her experience on over 1000 projects for private clients through out the country and Canada includes developing potential air emissions and air pollution emission inventories, conducting compliance assessments, preparing operating permit applications, supporting regulatory development, evaluating regulatory applicability, and performing QA/QC activities for air quality projects.

Relevant Experience:

Source Testing

Evaluated emissions from landfill gas engines, Private Clients. Conducting emissions tests at numerous LFG plants around the US to quantify controlled and uncontrolled emissions as well as determined the destruction efficiencies for combined and individual HAPs.

Evaluated Emissions from Glass Bead Production, Private Client. Conducted testing of total particulate, PM 10 and PM 2.5 emissions from a glass bead production facility – this facility makes the glass beads added to paints to give them their reflective properties. Prepared Site-Specific Test Plans and a Quality Assurance Project Plan (QAPP), field testing, laboratory analyses, data reduction and report preparation.

Evaluated Emissions from Gas turbines, Private Clients. Conducted testing of formaldehyde, benzene and other HAPS emissions from newly installed gas turbines comparing analytical results from EPA Method 0030, the "Chilled Impinger Method" from NCASI, TO-12, TO-15, EPA Method 18 and EPA Method 25A. Prepared Site-Specific Test Plans, field testing, laboratory analyses, data reduction and report preparation.

Evaluated Compliance of Air Emissions from 23 dust collectors, Private Client. Evaluated air emissions from a newly built utility with almost 23 individual dust collectors. Tested these collectors under maximum and minimum production to determine where the manufacturer and consultant varied on the permitted limits. Developed a test protocol acceptable to the regulatory agency and assisted the regulatory agency in calculating applicable and attainable permit limits for the facility.

Development of General Work Plans, and Site-Specific Test Plans (SSTPs), Private Clients. Prepared more than 750 work plans, for clients, ranging from single, routine compliance test programs to complex startups. Prepared more than 225 SSTPs, including projects for clients that included FTIRS, ammonia testing, ambient monitoring and on-site GC/MS.

Ambient Monitoring

Installed and quantified ambient baseline emissions, Private Client. Installed and responsible for four continuous monitoring locations for measuring suspended particulates and gaseous pollutants. Conducted to determine pollutant effects and effects of air pollution on vegetation, surrounding residences and wildlife.

Indoor air quality at US Army Base, Fort Bragg, NC. Responsible for gathering baseline air quality (metals, total particulate, HAPs and VOCs) for tactical / field welding "Pods" for solders working in both enclosed and open "Pods." Selected and procured sampling equipment, and trained us army personnel to operate the equipment, coordinated with US Army personnel, and provided trouble-shooting and support services.

Laboratory Analysis

Managed Routine and Complex Analyses, Private Clients. Responsible for analyses performed in-house by RMC Environmental, Inc. and by outside contract laboratories. Ensures that source emissions samples are analyzed in a manner consistent with EPA reference Methods or other standard methodologies. Samples analyzed include air emission samples, (e.g., particulates, fluorides, H_2S, total VOC, dioxin/furan, trace metals, and PCBs) and process samples (e.g, solid, liquid, and gaseous fuels; inks, paints, solvents; water and wastewater).

Analyzed TSP and PM10 Samples, Private Client. Provide analytical services to support an ambient sampling program at a recently closed hazardous waste landfill. Developed SOPs for TSP and PM10 analyses, provided filter media, and provided gravimetric analyses of the collected samples. Analyzed more than 600 individual samples.

Regulatory Support

Supported Air Standard Development, State Agencies. Regularly provide regulatory support by preparing responses regarding testing and permitting issues, VOC capture efficiency test protocols, sampling and analytical procedures, and review and comment on general policy guidance. Participated in the development of standardized State forms for protocol and report preparation. Have conducting site visits to evaluate with state agencies to evaluate the feasibility of using specific methodologies and enclosures for printing and VOC producing facilities.

Data Analysis

BETA and final testing of PC-based Data Reduction ISOCALC Program, Private Client. Involved in development of PC-based data reduction tool for use in calculating results for EPA Methods 1 through 5. This program is utilized by testing companies and state agencies.

Quality Assured Emissions Test Data Calculations, Private Clients. In the performance of source testing projects, responsible for field and laboratory data reduction, and calculation and tabulation of final results. These projects range in complexity from routine Method 5 compliance tests to more sophisticated calculations for trace metals, dioxin/furan, PCBs, volatile and semi-volatile organics, CEMS, and DRE testing.

Andrew McDermand

Technical Staff

Primary Role: Source Testing

Other Role(s): Ambient Monitoring
Laboratory Analysis
Data Analysis

Firm: RMC Environmental, Inc.

Level: Technical Level 2

Experience: 5 years

Education: AS, 2003, Biology, McHenry County College

Basis for Selection:

- **Currently Assistant Project Manager for Private Client – offset and gravuere printing process for VOC/HAPS and emissions inventory.**
- **Served as Program Manager on over 250 compliance and source emissions tests encompassing over 12 different source categories.**
- **Managed more than 25 projects conducted to evaluate applicability of current AP-42 factors.**

Mr. McDermand has specialized in source testing and ambient air monitoring for over 5 years. He is responsible for overseeing the technical management and source-testing personnel of RMC Environmental, Inc., a woman owned source testing company headquartered in Chicago, Illinois. His experience on over 700 projects for private clients through out the country and Canada includes developing potential air emissions and air pollution emission inventories, conducting compliance assessments, supporting regulatory development, evaluating regulatory applicability, and performing QA/QC activities for air quality projects.

Relevant Experience:

Source Testing

Evaluating VOC / HAPs emissions from Offset and Gravuere Printing Presses, Private Client. Conducting emissions tests at 10 different printing facilities / plants to quantify controlled and uncontrolled emissions as well as determined the destruction efficiencies for individual total VOCs HAPs. Assisting with the optimization of oxidizers associated with these presses to minimize the amount of wasted natural gas thereby lowering the costs associated with running these oxidizers and minimize the Total VOC and HAPS output.

Evaluated Emissions from Glass Bead Production, Private Client. Conducted testing of total particulate, PM 10 and PM 2.5 emissions from a glass bead production facility – this facility makes the glass beads added to paints to give them their reflective properties.

Evaluated Emissions from Engines & Gas turbines, Private Client. Conducted testing of formaldehyde, emissions from eight newly installed gas turbines comparing analytical results from EPA method 0030 and the "Chilled Impinger Method" from NCASI. Prepared Site-Specific Test Plans, field testing, laboratory analyses, data reduction and report preparation.

Evaluated Compliance of Air Emissions from 23 dust collectors, Private Client. Evaluated air emissions from a newly built utility with almost 23 individual dust collectors. Tested these collectors under maximum and minimum production to determine where the manufacturer and consultant varied on the permitted limits. Developed a test protocol acceptable to the regulatory agency and assisted the regulatory agency in calculating applicable and attainable permit limits for the facility.

Development of General Work Plans, and Site-Specific Test Plans (SSTPs), Private Clients. Prepared more than 100 work plans, for clients, ranging from single, routine compliance test programs to complex startups. Prepared more than 50 SSTPs, including projects for clients that included FTIRS, ammonia testing, ambient monitoring and on-site GC/MS.

Ambient Monitoring

Installed and quantified ambient baseline emissions, Private Client. Installed and responsible for four continuous monitoring locations for measuring suspended particulates and gaseous pollutants. Conducted to determine pollutant effects and effects of air pollution on vegetation, surrounding residences and wildlife.

Indoor air quality at US Army Base, Fort Bragg, NC. Managed the baseline air quality testing (metals, total particulate, HAPs and VOCs) for tactical / field welding "Pods" for solders working in both enclosed and open "Pods." Selected and procured sampling equipment, and trained us army personnel to operate the equipment, coordinated with US Army personnel, and provided trouble-shooting and support services.

Laboratory Analysis

Managed Routine and Complex Analyses, Private Clients. Responsible for analyses performed in-house by RMC Environmental, Inc. and by outside contract laboratories. Ensures that source emissions samples are analyzed in a manner consistent with EPA reference Methods or other standard methodologies. Samples analyzed include air emission samples, (e.g., particulates, fluorides, H_2S, total VOC, dioxin/furan, trace metals, and PCBs) and process samples (e.g, solid, liquid, and gaseous fuels; inks, paints, solvents; water and wastewater).

Analyzed TSP and PM10 Samples, Private Client. Provide analytical services to support an ambient sampling program at a recently closed hazardous waste landfill. Developed SOPs for TSP and PM10 analyses, provided filter media, and provided gravimetric analyses of the collected samples. Analyzed more than 100 individual samples.