WMNY – HIGH ACRES RENEWABLE ENERGY LANDFILL GAS ENGINE EMISSION TEST REPORT

WASTE MANAGEMENT OF NEW YORK, LLC

HIGH ACRES RENEWABLE ENERGY
FAIRPORT, NEW YORK

DISCLAIMER:
SOME FORMATTING CHANGES MAY HAVE OCCURRED WHEN THE ORIGINAL DOCUMENT WAS PRINTED TO PDF; HOWEVER, THE ORIGINAL CONTENT REMAINS UNCHANGED.

Prepared by:
Conestoga-Rovers & Associates

2055 Niagara Falls Blvd.
Suite Three
Niagara Falls, NY 14304

Office: (716) 297-6150
Fax: (716) 297-2265

web: http:\\www.CRAworld.com

AUGUST 2011
REF. NO. 072873 (2)

TABLE OF CONTENTS

Page

1.0 INTRODUCTION 1
1.1 PROJECT OVERVIEW 1
1.2 CATERPILLAR 3520 ENGINE #1 1
1.3 PROJECT ORGANIZATION 1
1.4 PROCESS DESCRIPTION 2
1.5 TEST PLAN 2
1.6 OBJECTIVES 3

2.0 SAMPLING AND ANALYTICAL PROCEDURES 4
2.1 TEST SITE DESCRIPTION 4
2.1.1 3520 ENGINE OUTLET 4
2.1.2 3520 ENGINE OPERATING CONDITIONS (ENGINE #1) 4
2.2 STACK GAS VELOCITY AND VOLUMETRIC FLOW (RM 2) 4
2.3 GAS ANALYSIS FOR OXYGEN (O2), CARBON DIOXIDE (CO2) AND DRY MOLECULAR WEIGHT (RM 3A) 5
2.4 MOISTURE DETERMINATION (RM 4) 5
2.5 TOTAL OXIDES OF NITROGEN (RM 7E) 5
2.6 CARBON MONOXIDE (RM 10) 6
2.7 TGNMOC EMISSIONS (RM 25A) 6
2.8 CALCULATIONS 6
2.8.1 VOLUMETRIC FLOW RATE (RM 2) 7
2.8.2 STACK GAS MOLECULAR WEIGHT (RM 3) 7
2.8.3 STACK GAS MOISTURE CONTENT (RM 4) 8

3.0 QUALITY ASSURANCE AND QUALITY CONTROL 10
3.1 EQUIPMENT AND SAMPLING PREPARATION 10
3.1.1 GENERAL GLASS CLEANING 10
3.2 LEAK CHECK PROCEDURES 10
3.2.1 MOISTURE TRAIN 10
3.2.2 PITOT LEAK CHECK 11
3.3 CALIBRATIONS 11
3.3.1 METER BOX CALIBRATION 11
3.3.2 PITOT CALIBRATION 11
3.3.3 THERMOCOUPLE CALIBRATION 11
3.3.4 BAROMETER CALIBRATION 12
3.4 CEMS SAMPLING PERFORMANCE SPECIFICATIONS 12
3.4.1 CALIBRATION ERROR (CE) TEST 12
3.4.2 POST-TEST DRIFT CHECK 13
3.4.3 STRATIFICATION TEST 13
3.4.4 NO2 TO NO CONVERSION EFFICIENCY 13
3.4.5 RM 205 CHECK 13
3.5 DATA REDUCTION 14

4.0 RESULTS 15

LIST OF FIGURES
(Following Text)

FIGURE 2.1 ENGINE OUTLET

LIST OF TABLES

TABLE 1.1 TEST SUMMARY

TABLE 3.1 CALIBRATION DATA

TABLE 4.1 ENGINE #1 TEST RESULTS

LIST OF APPENDICES

APPENDIX A FIELD DATA AND CALCULATION SHEETS

APPENDIX B CALIBRATION DATA

APPENDIX C ENGINE OPERATING DATA

APPENDIX D APPROVAL LETTER

1.0 INTRODUCTION

1.1 PROJECT OVERVIEW

Waste Management of New York, LLC (WMNY) contracted Conestoga-Rovers & Associates, Inc. (CRA) to perform emission testing of one landfill gas engine at the High Acres Renewable Energy Facility located in Fairport, NY. WMNY operates the High Acres Landfill and Recycling Center (HALRC) and has been required to perform emissions testing of Engine #1 in Plant 2 (Caterpillar 3520 internal combustion (IC) engine) in order to demonstrate compliance with the emission standards listed under 40 CFR Part 60, Subpart JJJJ.

1.2 CATERPILLAR 3520 ENGINE #1

Engine #1 was recently installed at the Facility after replacing an older unit in late April 2011. Since Engine #1 (which is rated at 2,233 brake horsepower (bhp) was installed after July 1, 2009, the engine is subject to the emission standards listed under 40 CFR Part 60, Subpart JJJJ. The engine has not been certified by the manufacturer to meet the emission standards; therefore, performance testing is required within 60 days after achieving the maximum production rate at which the engine will be operated, but not later than 180 days after initial startup. The engine was placed on-line on May 24, 2011 and must have an initial performance test no later than July 23, 2011. Testing was completed on July 14, 2011.

1.3 PROJECT ORGANIZATION

The primary contacts for this project are:

CRA Project Manager:

Mr. Steve Wilsey
2055 Niagara Falls Blvd. Suite 3
Niagara Falls, NY 14304
Phone: (716) 297-6150
Fax: (716) 297-2265

CRA Project Coordinator:

Mr. Steve Culmo
2055 Niagara Falls Blvd. Suite 3
Niagara Falls, NY 14304
Phone: (716) 297-6150
Fax: (716) 297-2265

WMNY Project Manager:

Ms. Rebecca Zayatz
1550 Balmer Road
Model City, NY 14107
Phone: (716) 754-0279
Fax: (716) 754-0287

The CRA field test crew consisted of Mr. Steven Culmo, and Mr. Keith Jaworski.

1.4 PROCESS DESCRIPTION

The High Acres Landfill produces landfill gas through the process of organic decomposition of municipal solid waste. As the volume of these gases increase, they are collected and routed through a landfill gas collection system and destructed in two enclosed flares and / or multiple engines which combust the landfill gas.

1.5 TEST PLAN

Testing was designed according to United States Environmental Protection Agency (USEPA) Reference Methods (RMs) outlined in the Code of Federal Regulations, Title 40, Part 60, *Protection of the Environment*, Appendix A. These versions of the reference methods were obtained from the United States Environmental Protection Agency (USEPA) Emission Measurement Center (EMC) website (www.epa.gov/ttn/emc). A summary of the test program is presented in Table 1.1. CRA was responsible for performing all testing associated with the test program. WMNY was responsible for supplying CRA with copies of the process data and operation of the equipment that was tested.

1.6 OBJECTIVES

The objectives of this test program were to:

- Demonstrate that the NO_x emissions from Engine #1 in Plant 2 are less than 2.0 g/bhp-hr
- Demonstrate that the CO emissions from Engine #1 in Plant 2 are less than 5.0 g/bhp-hr
- Demonstrate that the VOC emissions from Engine #1 in Plant 2 are less than 1.0 g/bhp-hr

2.0 SAMPLING AND ANALYTICAL PROCEDURES

2.1 TEST SITE DESCRIPTION

Representative measurement of pollutant emissions and total volumetric flow rate from a stationary source require a measurement site where the effluent stream is flowing in a known direction and cyclonic flow is not present.

According to RM 1, the cross section of the stack is divided into equal areas and a traverse point is then located within each of these areas. The number of traverse points in a cross section is determined by the number of duct diameters upstream and downstream from the test location to a flow disturbance.

2.1.1 3520 ENGINE OUTLET

The outlet ports are located in a horizontal duct with an inside diameter of 16 inches. There are two sample ports located at 90 degrees apart from each other. The sample ports are located 128 inches or eight duct diameters downstream, and 32 inches or 2 duct diameters upstream of a flow disturbance. A total of 16 traverse points were sampled; eight from each port. Figure 2.1 is a diagram of the engine outlet sampling location and traverse point layout.

2.1.2 3520 ENGINE OPERATING CONDITIONS (ENGINE #1)

Based on information recorded during testing of engine #1, the engine produced an average of 1,610 kW/hr of electricity on the day of the testing. Therefore, the engine was operating at approximately 2,233 BHp during the testing period. Appendix C presents a summary of the engine operating data during the performance testing.

2.2 STACK GAS VELOCITY AND VOLUMETRIC FLOW (RM 2)

According to RM 2, the gas velocity in the stack was determined from the average velocity head with a type-S pitot tube, gas density, stack temperature, and stack pressure. A cyclonic flow check was conducted on July 13, 2011 by measuring the velocity pressure and null point at each traverse point. The average null point angle from zero was less than 20 degrees at each sample location. These data are included in Appendix A.

The average velocity head is determined using an inclined manometer and a type-S pitot tube with a known coefficient of 0.84 that is determined geometrically by standards set forth in RM 2. Stack temperature was taken at each traverse point using a type-K thermocouple. Static pressure was determined using a straight tap and an inclined manometer.

2.3 GAS ANALYSIS FOR OXYGEN (O_2), CARBON DIOXIDE (CO_2) AND DRY MOLECULAR WEIGHT (RM 3A)

RM 3A was used to determine stack gas oxygen (O_2) and carbon dioxide (CO_2) concentrations. Gas samples were continuously extracted from the exhaust gas stream and transported by heated sample line to a refrigerated sample gas conditioner to remove moisture, and then directed to the analyzers. O_2 concentrations were determined with a Horiba MPA-510 magnetopneumatic analyzer. CO_2 concentrations were determined with a Horiba VIA-510 infrared analyzer. The Analyzers were calibrated with USEPA Protocol gases at three points zero, 12.28% O_2 / 10.88% CO_2, and 21.97% O_2 / 18.64% CO_2. Data from the analyzers were recorded on a data acquisition system (DAS). The field data and calculation sheets are included in Appendix A.

2.4 MOISTURE DETERMINATION (RM 4)

Moisture was measured using a RM 5-type train. The sample probe was placed at the centroid of the stack and left at one sample point for the duration of the test. Three, 60-minute sample runs were performed on each source. The field data and calculation sheets are included in Appendix A.

2.5 TOTAL OXIDES OF NITROGEN (RM 7E)

NO_x concentrations were measured according to RM 7E using a TECO 42I chemiluminescent analyzer calibrated to a range of 0-98.7 ppm. The analyzer was calibrated with three gases, zero, 49.4, and 98.7 ppm. The average concentration for the three runs was 41.1 ppm. Individual gas concentrations were produced with a Horiba Gas Divider (GDS) model SGD-710 from nitrogen and a USEPA Protocol gas: 493.6 ppm NO in nitrogen. The field data and calculation sheets are included in Appendix A.

2.6 CARBON MONOXIDE (RM 10)

Carbon monoxide (CO) concentrations were measured according to USEPA RM 10 using a TECO Model 48C analyzer in the same manner as mentioned above. The analyzer was calibrated with three gases, zero, 508, and 914.4 ppm. The average concentration for the three runs was 632 ppm. Individual gas concentrations were produced with a Horiba Gas Divider (GDS) model SGD-710 from nitrogen and a USEPA Protocol gas: 1016 ppm CO in nitrogen. Field data and calculation sheets are included in Appendix A.

2.7 TGNMOC EMISSIONS (RM 25A)

NMOC concentrations were measured using a JUM Model 109A Non-Methane Hydrocarbon Analyzer. The test program consisted of three 60-minute test runs per source with 30-second average concentration data collected using a PC-based data acquisition system (DAS).

The Modified Method 25A sampling train consisted of a probe with a heated external filter and heated Teflon® sample line. The sample line was heated to 300°F and plumbed directly to the inlet of the analyzer.

The total hydrocarbon channel was calibrated in a range of 0-1000 ppmv as C_3H_8 (propane). The methane channel was calibrated in a range of 0-2000 ppmv CH_4 (methane). Calibration of the 109A was performed with propane/methane in air EPA Protocol No. 1 gas mixtures according to RM 25A. The propane was calibrated at four points, zero, 901.7, 535, and 271. The methane was calibrated at four points, zero, 1885.5, 1047.5, and 628.5.

Individual gas concentrations were produced with a Horiba Gas Divider (GDS) model SGD-710 from nitrogen and a USEPA Protocol gas: 901.7 ppm propane in air, and 2095 ppm methane in air. Field data and calculation sheets are included in Appendix A.

2.8 CALCULATIONS

This section presents samples of the calculations utilized for this test program. Appendix A presents field use spreadsheets.

® Teflon is a registered trademark of DuPont.

2.8.1 VOLUMETRIC FLOW RATE (RM 2)

$$\upsilon_s = K_p C_p \left(\sqrt{\Delta p}\right)_{avg} \sqrt{\frac{T_{s(avg)}}{P_s M_s}}$$

υ_s = Average stack gas velocity, ft/sec
K_p = Pitot tube constant
C_p = Pitot tube coefficient, dimensionless
Δ_p = Velocity head of stack gas, in. H_2O
Ts = Absolute stack temperature, °R
Ps = Absolute stack gas pressure, in. Hg
Ms = Molecular weight of stack gas, wet basis, lb/lb-mole

$$Q_{sd} = 60(1 - B_{ws}) v_s A \frac{T_{std}}{T_{s(avg)}} \frac{P_s}{P_{std}}$$

Q_{sd} = Dry volumetric stack gas flow rate, dry standard ft^3/minute
B_{ws} = Water vapor in the gas stream, proportion by volume
v_s = Average stack gas velocity, ft/sec
A = Cross-sectional area of stack, ft^2
T_{std} = Standard absolute temperature, 528° R
P_s = Absolute stack gas pressure, in. Hg
P_{std} = Standard pressure, in. Hg
T_s = Stack gas temperature, ° R
Ms = Molecular weight of stack gas, wet basis, lb/lb-mole

2.8.2 STACK GAS MOLECULAR WEIGHT (RM 3)

$$M_d = 0.440(\%CO_2) + 0.320(\%O_2) + 0.280(\%N_2 + \%CO)$$

M_d = Dry molecular weight, lb/lb - mole
$\% CO_2$ = Percent CO_2 by volume, dry basis
$\% O_2$ = Percent O_2 by volume, dry basis
$\%CO$ = Percent CO by volume, dry basis
$\% N_2$ = Percent N_2 by volume, dry basis
0.280 = Molecular weight of N_2 and CO, divided by 100
0.320 = Molecular weight of O_2, divided by 100
0.440 = Molecular weight of CO_2, divided by 100

2.8.3 STACK GAS MOISTURE CONTENT (RM 4)

Volume of water vapor condensed:

$$V_{wc(std)} = \frac{(V_f - V_i)\ pw\ RT_{std}}{P_{std}M_w}$$

$$= K_i\ (V_f - V_i)$$

Where:

K_I = 0.04707 ft/ml

Volume of water vapor collected in silica:

$$V_{wsg(std)} = \frac{(W_f - W_i)RT_{std}}{P_{std}M_w}$$

$$= K_2\ (W_f - W_i)$$

Where:

K_2 = 0.04715 ft^3/g

$V_{wsg(std)}$ = Volume of water vapor collected corrected to standard conditions, scf
W_f = Final weight of impinger train, g.
W_i = Initial weight of impinger train, g.
T_{std} = Standard absolute temperature, 528° R
P_{std} = Standard absolute pressure, 29.92 in. Hg
M_w = Molecular weight of water, 18.0 lb/lb-mole

Sample gas volume:

$$V_{m(std)} = V_m Y \frac{(P_m)(T_{std})}{(P_{std})(T_m)}$$

$V_{m(std)}$ = Dry gas volume measured by dry gas meter, corrected to standard conditions, dscf
V_m = Dry gas volume measured by dry gas meter, dcf
Y = Dry gas meter calibration factor
P_m = Absolute pressure at the dry gas meter, in. Hg
T_{std} = Standard absolute temperature, 528° R
P_{std} = Standard absolute pressure, 29.92 in. Hg
T_m = Absolute temperature at meter, °R

$$B_{ws} = \frac{V_{wsg(std)} + V_{wc(std)}}{V_{wsg(std)} + V_{wc(std)} + V_{m(std)}}$$

B_{ws} = Water vapor in the gas stream, proportion by volume

$V_{wc(std)}$ = Volume of water vapor condensed corrected to standard conditions, scf

$V_{wsg(std)}$ = Volume of water vapor collected in silica gel corrected to standard conditions

$V_{m(std)}$ = Dry gas volume measured by the dry gas meter, corrected to standard conditions, dscf

3.0 QUALITY ASSURANCE AND QUALITY CONTROL

3.1 EQUIPMENT AND SAMPLING PREPARATION

Sampling equipment is cleaned and functions are checked and calibrated prior to use in the field. The QA/QC procedures for sampling operations include the performing of leak checks before and after each sample run. These are conducted on all train components including vacuum sample trains and pitot lines. If pre-test leak checks do not meet the acceptable criteria for each method, the trains are adjusted and the leaks are corrected. Post-test leak checks are mandatory and were performed and recorded on all field data sheets. All field, as well as pre and post test QA/QC checks were acceptable and are included in Appendices B.

3.1.1 GENERAL GLASS CLEANING

Following field use and sample recovery, all glassware is cleaned for future use. This cleaning is accomplished by a five-step procedure. After any and all vacuum grease is removed, all glassware is soaked for at least 10 minutes in a 45% w/v potassium hydroxide (KOH) solution which is maintained at a temperature of 37°C to 51°C (100°F to 125°F) to increase the cleaning efficiency. The glassware is washed three times with hot soapy water, followed by three rinses with hot tap water. Next, the glassware is rinsed three times with distilled deionized water and, finally, rinsed three times with acetone.

3.2 LEAK CHECK PROCEDURES

3.2.1 MOISTURE TRAIN

A leak check is mandatory at the conclusion of each sampling run. The leak check was conducted in accordance with the procedures outlined in EPA Method 4. The probe tip was plugged and the sample rate is adjusted until the desired vacuum is reached. No leakage rates were found to be greater than 0.02 cubic feet per minute (cfm), so all results are acceptable.

3.2.2 PITOT LEAK CHECK

The pitot tubes used during the test program were leak checked prior to the test series and following the test series. The leak check was performed by placing flexible tubing over the positive pressure side of the pitot tube tip. Next, the tubing was pressurized to greater than 3 inches of H_2O and the tubing was pinched off. There was no loss of pressure for 15 seconds which indicates a successful leak check. This procedure was repeated for the negative pressure (vacuum) side of the pitot tube, except that vacuum, and not pressure, was placed on the tubing.

3.3 CALIBRATIONS

3.3.1 METER BOX CALIBRATION

Following the procedures outlined in EPA Method 5, Section 5.3.1, a standard dry gas meter was substituted for a wet test meter per EPA Method 5, Section 7.1. Primarily, the meter calibration factors (Y and □H@) are determined at multi-point calibration runs at a variety of flow rates. Factors calculated at the individual runs must agree within 2% of each other. The factors are then averaged and that average is posted on the meter box.

After each field sampling project, a post-test calibration is made. This consists of three calibration runs at the average sampling rate seen for that project. The factors calculated from the three individual runs must agree to within 2% of each other and are averaged. That average must agree to within 5% of the factor posted on the meter box. Post-test calibration data for the meter boxes are included in Appendices B.

3.3.2 PITOT CALIBRATION

Pitot tubes are calibrated following the procedures outlined in EPA Method 2, Section 4. Pitot tubes are given a baseline coefficient when they meet certain geometrically measured angles and dimensions as set forth in the method. Post-test calibration data for the pitots are included in Appendices B.

3.3.3 THERMOCOUPLE CALIBRATION

According to RM 2, Section 4.3, an NIST Traceable Electronic Thermocouple Calibrator/Simulator (CAL-PAL) and calibrated thermocouple is substituted for the

mercury-in-glass thermometer. According to EMTIC GD-28, a single-point calibration check (at ambient temperature) of the thermocouple being calibrated is made. If the thermocouple being calibrated and the CAL-PAL are within ±2.0°F of each other, the calibration is acceptable. Post-test calibration data for thermocouples are included in Appendices B.

3.3.4 BAROMETER CALIBRATION

CRA's barometer is compared to the barometer from the National Weather Service (NWS) located at the Niagara Falls Airport. If the CRA barometer disagrees by more than ±2.3 mm (0.1 in.) of Hg from the barometer located at the airport, the CRA barometer is adjusted until it agrees with the NWS barometer.

CRA and the NWS elevations are within 10 feet of each other thus eliminating the need for any elevation correction.

When in the field, barometer readings are taken from the CRA barometer. At the conclusion of fieldwork, the barometer is brought back, checked against the NWS barometer, and corrected if necessary. Readings taken in the field are corrected based on the degree of error between the CRA barometer and the NWS barometer. Post-test calibration data for the barometer are included in Appendices B.

3.4 CEMS SAMPLING PERFORMANCE SPECIFICATIONS

The CEMs sampling QA/QC activities will include the following:

3.4.1 CALIBRATION ERROR (CE) TEST

The CE tests were performed following the procedures outlined in RM 7E, by first introducing the zero calibration gas and adjusting the instrument to read zero. Next, the high span gas was introduced, and the analyzer will be adjusted to match this calibration gas certified concentration. Next, the zero, mid, and high calibration gases were introduced, and the analyzer's response were within +/-2% of span.

The CE test for RM 25A were preformed following the procedures outlined in Method 25A, Section 8.4 by first introducing the zero calibration gas and adjusting the instrument to read zero. The high span gas was then introduced, and the analyzer's

response adjusted to match this calibration gas's certified concentration. Low and mid calibration gases were then introduced. For all calibration gases, the analyzer's response must be within ± 5 percent of the gas value. All responses were within the limits of the method and are included with the field data sheets.

3.4.2 POST-TEST DRIFT CHECK

Following the procedure outlined in RM 7E and 25A, a post-test drift check was performed immediately following the sample run. The zero gas was introduced into the system, and the monitor's response was recorded. The span was drift checked in the same manner.

3.4.3 STRATIFICATION TEST

A stratification test of the gas stream was conducted during run 1 of each source. The exhaust stack was traversed using 3 points located at 16.7%, 50%, and 83.3% of the stack diameter or 2.7, 8, and 13.3 inches from the stack wall. O_2 was measured at each point for six minutes, which is greater than twice the response time of the system. All points for each source were found to be within +/-5% of the overall average concentration of the entire run. A single point located in the centroid of the stack as allowed in RM 7E was used for all runs. The results of the stratification tests are included in Appendices B.

3.4.4 NO_2 TO NO CONVERSION EFFICIENCY

During the initial setup of the continuous monitoring system, the efficiency of the NO_2 to NO converter was determined and documented. For this test, a certified mixture of 49.68 ppm NO2 in N2 was introduced to the NO_x monitor. After the signal stabilized, the NO_x value was 46.6 ppm, which shows 93.8% conversion which is greater than or equal to 90% of the certified gas value requirement of RM 7E. The conversion efficiency test data are included in Appendices B.

3.4.5 RM 205 CHECK

A RM 205 check was performed on the Horiba Gas Divider (GDS) model SGD-710. The divider divides 10% increments by mixing the EPA protocol gas with either CEMS Grade nitrogen or CEMS grade Air, depending on the balance in the protocol gas. The

divider was checked at each point that was used for the test three times by dividing the high O_2 calibration gas. The analyzer was also challenged with the mid O_2 with no division as an audit point. The results of the divider check are included in Appendix B.

3.5 DATA REDUCTION

The QA/QC procedure for data reduction includes using computer spreadsheet programs to generate tables of results. Data input files and equations are double-checked by a second person, and tables are checked for transposition errors with spot calculations being performed by hand. Hand calculations for run 1 are included in Appendix A.

4.0 RESULTS

The results are presented in Table 4.1. The average g/BHp-hr results are NO_x 0.26, CO 2.46, and NMOC 0.03. These results indicate that the engine meets the limits listed in 40 CFR Part 60, Subpart JJJJ, as well as those listed in the NYSDEC title V permit.

FIGURES

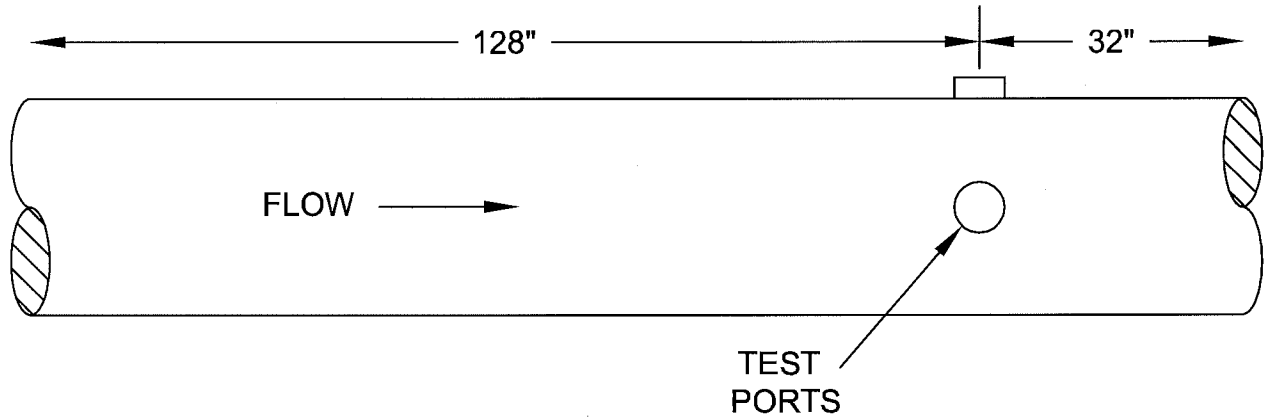

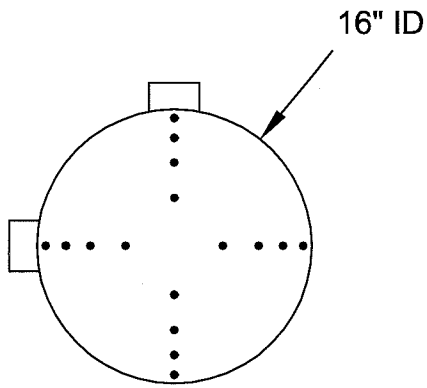

STACK TEST PORT
CROSS SECTION

TRAVERSE POINT	DISTANCE FROM STACK WALL (INCHES)
1	0.51
2	1.68
3	3.10
4	5.17
5	10.83
6	12.90
7	14.32
8	15.49

figure 2.1

LANDFILL GAS ENGINE
SAMPLE POINT LOCATIONS
HIGH ACRES RENEWABLE ENERGY
Fairport, New York

72873-00(002)GN-NI001 JUL 21/2011

TABLES

TABLE 1.1

TEST METHODS
ENGINE #1 TEST
HIGH ACRES RENEWABLE ENERGY
WASTE MANAGEMENT OF NEW YORK, LLC
JULY 14, 2011

Parameter	*Reference Method*	*Runs*	*Duration*	*Comments*
Gas Flow Rate	RMs 1-2	3	N/A	1 per run
Molecular Weight	RM-3A	3	1 hour	Concurrent with RM 7E sampling
Moisture	RM-4	3	1 hour	Concurrent with RM 7E sampling
Oxides of Nitrogen	RM-7E	3	1 hour	
Carbon Monoxide	RM-10	3	1 hour	
Verification of Calibration Gas Dilution System	RM-205			During initial calibration procedures

TABLE 3.1

EQUIPMENT CALIBRATION SUMMARY
ENGINE #1 TEST
HIGH ACRES RENEWABLE ENERGY
WASTE MANAGEMENT OF NEW YORK, LLC
JULY 14, 2011

Equipment	*Reference*	*Calibrated With*	*Limit*	*Equipment ID*	*Calibration Date*	*Calibration Within Limit?*
Barometer	Method 2 Section 4.4	NWS Barometer (a)	± 0.1 in. Hg	BE04199	7/18/2011	YES
Meter Box Pre-Test	Method 5 Section 5	Standard Dry Gas Meter	Y: within ±0.02 of avg. ΔH@: within ±0.2 of avg.	BE04908	4/14/2011	YES
Meter Box Post-Test	Method 5 Section 5	Standard Dry Gas Meter	Y: avg. within 5% of meter box value	BE04908	7/18/2011	YES
Pitot Assembly	Method 2	Reference Thermocouple/ Caliper	(b)	BEO4193A	7/18/2011	YES

NWS = National Weather Service

Notes:

(a) The elevations of CRA and the National Weather Service (at the Niagara Falls Airport) are right next to each other, thus eliminating the need for elevation correction. The barometer is calibrated within one month prior to field use. The date above refers to the post-test calibration date. Refer to the calibration report for pre-test calibration date.

(b) Pitot calibration checks include the measurement of geometric specifications, equipment is inspected for damage or misalignment following each field test.

TABLE 4.1

SUMMARY OF TEST RESULTS
HIGH ACRES RENEWABLE ENERGY ENGINE #1 TEST
WASTE MANAGEMENT OF NEW YORK, LLC
FAIRPORT, NY
JULY 14, 2011

Parameter	*Units*	*Run 1*	*Run 2*	*Run 3*	*Average*
3520 Engine # 1					
Date		7/14/2011	7/14/2011	7/14/2011	
Run Time	start	8:32:00	10:20:00	12:05:00	
	stop	9:32:00	11:20:00	13:05:00	
Stack Flow	dscfm	4370	4420	4400	**4400**
Stack Moisture	%	14.9	14.1	14.4	**14.5**
O_2	%	8.5	8.5	8.5	**8.5**
CO_2	%	12.3	12.2	12.2	**12.2**
NO_x	ppmvd	40.3	40.9	42.1	**41.1**
	g/BHP-hr	0.26	0.26	0.27	**0.26**
	lb/hr	1.3	1.3	1.3	**1.3**
CO	ppmvd	638.3	632.1	626.6	**632.3**
	g/BHP-hr	2.47	2.47	2.44	**2.46**
	lb/hr	12.1	12.2	12.0	**12.1**
NMOC	ppmvd	12.3	16.1	8.4	**12.3**
	g/BHP-hr	0.03	0.04	0.02	**0.03**
	lb/hr	0.13	0.18	0.11	**0.14**

APPENDIX A

FIELD DATA AND CALCULATION SHEETS

CONESTOGA-ROVERS & ASSOCIATES

SUMMARY DATA SHEET

Client:	Waste Management	Plant:	Engine Plant	Location:	High Acres
Project #:	72873	Source:	3520 #1	Date:	7/14/2011
		$Temperature_{STD}$:	68	Molar Volume:	24.055

Run Information		1	2	3	
Stack Parameter					
Brake HP		2233	2233	2233	
mmBtu of Fuel (Fd)					
Moisture	%	14.9%	14.1%	14.4%	
Dry Std. Flow Rate					**Avg.**
	DSCFM	4370	4420	4400	
O2 (drift corrected)					
	%	8.5	8.5	8.5	**8.5**
CO2 (drift corrected)					
	%	12.3	12.2	12.2	**12.2**
10 / CO					
	ppmvd	638.3	632.1	626.6	**632.3**
	g/BHP-hr	2.47	2.47	2.44	**2.5**
	lb/hr	12.1	12.2	12.0	**12.1**
7E / NOx					
	ppmvd	40.3	40.9	42.1	**41.1**
	g/BHP-hr	0.26	0.26	0.27	**0.3**
	lb/hr	1.3	1.3	1.3	**1.3**

Client:	Waste Management	Plant:	Engine Plant	Location:	High Acres
Project #:	72873	Source:	3520 #1	Date:	7/14/2011

Method / Gas	3A / O2	3A / CO2	10 / CO	7E / NOx
Source	Engine #1	Engine #1	Engine #1	Engine #1
Calibration Drift Check				
Time	9:33 AM	9:33 AM	9:33 AM	9:33 AM
Span	21.97	18.64	914.4	98.72
Drift limit	< 3.0%	< 3.0%	< 3.0%	< 3.0%
Zero				
Initial	0.4	0.2	1.2	0.2
Final	0.2	0.2	1.2	0.1
Average (C_o)	0.3	0.2	1.2	0.15
Certified Value	0	0	0	0
% Drift	-0.9%	0.0%	0.0%	-0.1%
% Sys. Bias	0.5%	0.5%	0.0%	0.0%
Upscale (Cma)				
Upscale Gas:	Mid	Mid	Mid	Mid
Initial	12.25	10.9	507.3	50
Final	12.3	10.9	507	49.5
Average (C_m)	12.275	10.9	507.15	49.75
Certified Value	12.28	10.88	508	49.36
% Drift	-0.1%	0.0%	0.0%	-0.5%
% Sys. Bias	0.0%	0.0%	0.0%	-0.3%
Run Data Calculations				
Number of Sample Points:	122	122	122	122
Average Concentration (C):	8.63	12.28	636.91	40.63
Drift Corrected Average (C_{gas})	8.54	12.29	638.28	40.29
Maximum Concentration:	8.63	12.37	643.39	41.57
Minumum Concentration:	8.63	12.17	631.30	39.08

DATE TIME	%	%	ppmvd	ppmvd
7/14/2011 8:32	8.63	12.37	638.26	40.19
7/14/2011 8:32	8.63	12.37	633.38	39.48
7/14/2011 8:33	8.63	12.37	631.43	39.08
7/14/2011 8:33	8.63	12.37	631.30	39.82
7/14/2011 8:34	8.63	12.37	636.31	40.19
7/14/2011 8:34	8.63	12.37	637.41	40.36
7/14/2011 8:35	8.63	12.37	640.34	41.19
7/14/2011 8:35	8.63	12.37	639.24	39.93
7/14/2011 8:36	8.63	12.37	636.19	40.13
7/14/2011 8:36	8.63	12.37	636.43	40.13
7/14/2011 8:37	8.63	12.37	637.41	39.73
7/14/2011 8:37	8.63	12.37	637.41	40.56
7/14/2011 8:38	8.63	12.37	638.51	40.85
7/14/2011 8:38	8.63	12.37	638.38	40.51
7/14/2011 8:39	8.63	12.37	638.38	40.95
7/14/2011 8:39	8.63	12.37	635.45	40.17
7/14/2011 8:40	8.63	12.37	633.38	40.07
7/14/2011 8:40	8.63	12.37	634.23	40.62
7/14/2011 8:41	8.63	12.37	639.36	40.69
7/14/2011 8:41	8.63	12.37	639.36	40.40
7/14/2011 8:42	8.63	12.37	638.38	40.72
7/14/2011 8:42	8.63	12.37	639.36	40.28

7/14/2011 8:43	8.63	12.37	638.38	39.96
7/14/2011 8:43	8.63	12.37	640.34	40.92
7/14/2011 8:44	8.63	12.37	641.44	40.34
7/14/2011 8:44	8.63	12.37	638.38	40.30
7/14/2011 8:45	8.63	12.37	635.33	39.90
7/14/2011 8:45	8.63	12.37	637.41	40.19
7/14/2011 8:46	8.63	12.37	634.36	40.54
7/14/2011 8:46	8.63	12.37	637.41	40.46
7/14/2011 8:47	8.63	12.37	638.26	39.85
7/14/2011 8:47	8.63	12.37	636.43	40.32
7/14/2011 8:48	8.63	12.37	637.53	40.62
7/14/2011 8:48	8.63	12.27	640.34	41.14
7/14/2011 8:49	8.63	12.27	641.31	39.96
7/14/2011 8:49	8.63	12.27	637.41	40.28
7/14/2011 8:50	8.63	12.27	636.31	40.17
7/14/2011 8:50	8.63	12.27	639.36	40.51
7/14/2011 8:51	8.63	12.27	640.46	40.72
7/14/2011 8:51	8.63	12.27	642.29	40.61
7/14/2011 8:52	8.63	12.27	643.39	40.14
7/14/2011 8:52	8.63	12.27	637.41	39.59
7/14/2011 8:53	8.63	12.27	637.29	40.50
7/14/2011 8:53	8.63	12.27	641.44	41.03
7/14/2011 8:54	8.63	12.27	643.39	40.79
7/14/2011 8:54	8.63	12.27	642.29	40.57
7/14/2011 8:55	8.63	12.27	639.36	40.39
7/14/2011 8:55	8.63	12.27	640.34	40.56
7/14/2011 8:56	8.63	12.27	638.38	39.98
7/14/2011 8:56	8.63	12.27	634.36	40.48
7/14/2011 8:57	8.63	12.27	635.33	40.67
7/14/2011 8:57	8.63	12.27	635.45	40.52
7/14/2011 8:58	8.63	12.27	636.19	40.41
7/14/2011 8:58	8.63	12.27	636.31	40.30
7/14/2011 8:59	8.63	12.27	636.43	40.17
7/14/2011 8:59	8.63	12.27	635.33	40.46
7/14/2011 9:00	8.63	12.27	637.16	40.91
7/14/2011 9:00	8.63	12.27	638.38	40.59
7/14/2011 9:01	8.63	12.27	637.29	41.08
7/14/2011 9:01	8.63	12.27	638.38	40.53
7/14/2011 9:02	8.63	12.27	638.38	40.03
7/14/2011 9:02	8.63	12.27	634.48	40.03
7/14/2011 9:03	8.63	12.27	635.21	41.23
7/14/2011 9:03	8.63	12.27	640.46	40.80
7/14/2011 9:04	8.63	12.27	641.44	40.37
7/14/2011 9:04	8.63	12.27	638.38	40.78
7/14/2011 9:05	8.63	12.27	640.22	40.11
7/14/2011 9:05	8.63	12.27	639.36	41.01
7/14/2011 9:06	8.63	12.27	640.34	40.87
7/14/2011 9:06	8.63	12.27	640.34	41.12
7/14/2011 9:07	8.63	12.27	639.36	40.57
7/14/2011 9:07	8.63	12.27	637.41	40.57
7/14/2011 9:08	8.63	12.27	637.53	40.90
7/14/2011 9:08	8.63	12.27	639.48	41.06
7/14/2011 9:09	8.63	12.27	639.36	40.48
7/14/2011 9:09	8.63	12.27	636.19	40.46
7/14/2011 9:10	8.63	12.27	634.36	41.06
7/14/2011 9:10	8.63	12.27	636.31	41.06

7/14/2011 9:11	8.63	12.27	636.19	40.67
7/14/2011 9:11	8.63	12.27	637.29	41.14
7/14/2011 9:12	8.63	12.27	637.41	40.73
7/14/2011 9:12	8.63	12.27	638.38	41.30
7/14/2011 9:13	8.63	12.27	637.41	40.83
7/14/2011 9:13	8.63	12.27	636.31	40.92
7/14/2011 9:14	8.63	12.27	637.41	41.06
7/14/2011 9:14	8.63	12.27	635.45	40.34
7/14/2011 9:15	8.63	12.27	635.33	40.14
7/14/2011 9:15	8.63	12.27	631.30	40.62
7/14/2011 9:16	8.63	12.27	632.40	40.30
7/14/2011 9:16	8.63	12.27	633.38	41.22
7/14/2011 9:17	8.63	12.27	637.29	41.22
7/14/2011 9:17	8.63	12.27	636.31	40.67
7/14/2011 9:18	8.63	12.27	634.23	40.57
7/14/2011 9:18	8.63	12.27	634.36	40.95
7/14/2011 9:19	8.63	12.27	636.31	40.96
7/14/2011 9:19	8.63	12.27	636.31	40.92
7/14/2011 9:20	8.63	12.27	634.48	40.64
7/14/2011 9:20	8.63	12.27	633.38	41.03
7/14/2011 9:21	8.63	12.27	633.26	40.57
7/14/2011 9:21	8.63	12.27	635.33	40.76
7/14/2011 9:22	8.63	12.27	634.23	41.46
7/14/2011 9:22	8.63	12.27	636.43	40.72
7/14/2011 9:23	8.63	12.27	634.23	40.87
7/14/2011 9:23	8.63	12.27	634.36	41.06
7/14/2011 9:24	8.63	12.27	636.31	41.57
7/14/2011 9:24	8.63	12.17	638.38	41.12
7/14/2011 9:25	8.63	12.17	636.31	41.35
7/14/2011 9:25	8.63	12.17	634.36	41.01
7/14/2011 9:26	8.63	12.17	633.38	41.25
7/14/2011 9:26	8.63	12.17	635.45	41.08
7/14/2011 9:27	8.63	12.17	632.40	41.01
7/14/2011 9:27	8.63	12.17	634.36	41.51
7/14/2011 9:28	8.63	12.17	635.45	41.17
7/14/2011 9:28	8.63	12.17	633.38	41.12
7/14/2011 9:29	8.63	12.17	634.36	41.01
7/14/2011 9:29	8.63	12.17	635.45	41.22
7/14/2011 9:30	8.63	12.17	634.36	41.36
7/14/2011 9:30	8.63	12.17	636.31	41.26
7/14/2011 9:31	8.63	12.17	637.41	41.00
7/14/2011 9:31	8.63	12.17	635.33	40.75
7/14/2011 9:32	8.63	12.17	634.48	40.75
7/14/2011 9:32	8.63	12.17	631.43	41.17

Client:	Waste Management	Plant:	Engine Plant	Location:	High Acres
Project #:	72873	Source:	3520 #1	Date:	7/14/2011

Method / Gas	3A / O2	3A / CO2	10 / CO	7E / NOx
Source	Engine #1	Engine #1	Engine #1	Engine #1
Calibration Drift Check				
Time	11:21 AM	11:21 AM	11:21 AM	11:21 AM
Span	21.97	18.64	914.4	98.72
Drift limit	< 3.0%	< 3.0%	< 3.0%	< 3.0%
Zero				
Initial	0.4	0.2	1.2	0.2
Final	0.3	0.2	2.2	0.8
Average (C_o)	0.35	0.2	1.7	0.5
Certified Value	0	0	0	0
% Drift	0.5%	0.0%	0.1%	0.7%
% Sys. Bias	0.9%	0.5%	0.1%	0.7%
Upscale (Cma)				
Upscale Gas:	Mid	Mid	Mid	Mid
Initial	12.25	10.9	507.3	50
Final	12.4	10.8	506.5	51
Average (C_m)	12.325	10.85	506.9	50.5
Certified Value	12.28	10.88	508	49.36
% Drift	0.5%	-0.5%	-0.1%	1.5%
% Sys. Bias	0.5%	-0.5%	-0.1%	1.2%
Run Data Calculations				
Number of Sample Points:	122	122	122	122
Average Concentration (C):	8.66	12.17	630.33	41.91
Drift Corrected Average (C_{gas})	8.52	12.23	632.12	40.88
Maximum Concentration:	8.75	12.33	637.41	43.85
Minumum Concentration:	8.64	12.03	621.41	40.37

DATE TIME	%	%	ppmvd	ppmvd
7/14/2011 10:20	8.64	12.33	629.35	40.90
7/14/2011 10:20	8.64	12.33	629.35	41.72
7/14/2011 10:21	8.64	12.33	632.40	42.20
7/14/2011 10:21	8.64	12.33	632.40	41.68
7/14/2011 10:22	8.64	12.33	630.33	41.78
7/14/2011 10:22	8.64	12.33	629.35	41.22
7/14/2011 10:23	8.64	12.33	631.43	41.33
7/14/2011 10:23	8.64	12.33	633.38	41.78
7/14/2011 10:24	8.64	12.33	633.38	41.67
7/14/2011 10:24	8.64	12.33	635.45	41.81
7/14/2011 10:25	8.74	12.33	635.45	41.39
7/14/2011 10:25	8.74	12.33	636.19	41.51
7/14/2011 10:26	8.74	12.33	632.40	41.58
7/14/2011 10:26	8.64	12.33	632.28	41.06
7/14/2011 10:27	8.64	12.33	631.43	41.19
7/14/2011 10:27	8.64	12.33	632.28	41.73
7/14/2011 10:28	8.64	12.33	634.36	42.23
7/14/2011 10:28	8.74	12.23	636.19	41.75
7/14/2011 10:29	8.64	12.23	634.36	40.90
7/14/2011 10:29	8.64	12.23	628.13	41.78
7/14/2011 10:30	8.64	12.23	628.37	42.01

7/14/2011 10:30	8.64	12.23	629.35	41.84
7/14/2011 10:31	8.64	12.23	630.33	41.73
7/14/2011 10:31	8.64	12.23	631.43	41.37
7/14/2011 10:32	8.64	12.23	630.33	42.00
7/14/2011 10:32	8.64	12.23	633.50	41.36
7/14/2011 10:33	8.64	12.23	633.38	41.35
7/14/2011 10:33	8.64	12.23	630.33	41.17
7/14/2011 10:34	8.64	12.23	629.35	41.80
7/14/2011 10:34	8.64	12.23	629.47	41.80
7/14/2011 10:35	8.64	12.13	630.45	42.00
7/14/2011 10:35	8.64	12.13	634.36	42.01
7/14/2011 10:36	8.64	12.13	632.40	41.46
7/14/2011 10:36	8.64	12.13	632.40	42.25
7/14/2011 10:37	8.64	12.13	632.16	41.70
7/14/2011 10:37	8.64	12.13	632.28	41.94
7/14/2011 10:38	8.64	12.13	632.28	42.19
7/14/2011 10:38	8.64	12.13	632.40	41.77
7/14/2011 10:39	8.64	12.13	632.16	41.61
7/14/2011 10:39	8.64	12.13	632.28	41.75
7/14/2011 10:40	8.64	12.13	631.43	41.89
7/14/2011 10:40	8.64	12.13	632.40	42.19
7/14/2011 10:41	8.75	12.13	632.28	42.07
7/14/2011 10:41	8.75	12.13	631.43	41.63
7/14/2011 10:42	8.64	12.13	628.37	41.03
7/14/2011 10:42	8.64	12.13	628.37	41.79
7/14/2011 10:43	8.64	12.13	629.35	42.47
7/14/2011 10:43	8.64	12.13	635.33	42.82
7/14/2011 10:44	8.64	12.13	637.41	42.24
7/14/2011 10:44	8.64	12.13	634.36	41.26
7/14/2011 10:45	8.64	12.23	629.23	41.85
7/14/2011 10:45	8.64	12.23	632.40	42.49
7/14/2011 10:46	8.64	12.13	634.36	42.55
7/14/2011 10:46	8.64	12.13	633.50	41.48
7/14/2011 10:47	8.64	12.13	629.47	41.70
7/14/2011 10:47	8.64	12.13	628.25	41.39
7/14/2011 10:48	8.64	12.13	626.30	41.70
7/14/2011 10:48	8.64	12.13	624.34	41.81
7/14/2011 10:49	8.64	12.13	629.35	42.25
7/14/2011 10:49	8.64	12.13	633.50	42.05
7/14/2011 10:50	8.64	12.13	631.43	41.84
7/14/2011 10:50	8.64	12.13	628.37	41.84
7/14/2011 10:51	8.64	12.13	629.47	41.73
7/14/2011 10:51	8.64	12.13	632.28	41.86
7/14/2011 10:52	8.64	12.13	634.36	41.86
7/14/2011 10:52	8.64	12.13	634.36	41.97
7/14/2011 10:53	8.64	12.13	632.28	41.91
7/14/2011 10:53	8.64	12.13	630.33	42.05
7/14/2011 10:54	8.64	12.13	633.38	41.51
7/14/2011 10:54	8.64	12.13	628.25	41.23
7/14/2011 10:55	8.64	12.13	624.34	42.19
7/14/2011 10:55	8.64	12.13	628.37	41.81
7/14/2011 10:56	8.64	12.13	629.47	41.89
7/14/2011 10:56	8.64	12.13	628.25	42.02
7/14/2011 10:57	8.64	12.13	632.28	41.94
7/14/2011 10:57	8.64	12.13	633.50	42.05

7/14/2011 10:58	8.64	12.13	631.43	41.58
7/14/2011 10:58	8.64	12.13	628.37	41.40
7/14/2011 10:59	8.64	12.13	629.47	42.10
7/14/2011 10:59	8.64	12.13	631.43	42.69
7/14/2011 11:00	8.64	12.13	630.20	42.45
7/14/2011 11:00	8.64	12.13	627.40	41.17
7/14/2011 11:01	8.64	12.13	626.30	41.17
7/14/2011 11:01	8.64	12.13	625.44	41.17
7/14/2011 11:02	8.64	12.13	630.45	41.86
7/14/2011 11:02	8.64	12.13	634.36	42.53
7/14/2011 11:03	8.64	12.13	633.01	42.42
7/14/2011 11:03	8.64	12.13	629.47	41.89
7/14/2011 11:04	8.64	12.13	626.42	41.08
7/14/2011 11:04	8.64	12.13	628.13	41.89
7/14/2011 11:05	8.64	12.13	630.33	42.51
7/14/2011 11:05	8.64	12.13	632.28	42.86
7/14/2011 11:06	8.64	12.13	630.33	41.73
7/14/2011 11:06	8.64	12.13	627.40	41.44
7/14/2011 11:07	8.64	12.13	627.40	42.35
7/14/2011 11:07	8.64	12.13	628.25	42.86
7/14/2011 11:08	8.64	12.13	628.37	42.79
7/14/2011 11:08	8.74	12.13	624.34	42.66
7/14/2011 11:09	8.74	12.13	629.35	41.96
7/14/2011 11:09	8.64	12.13	622.27	40.37
7/14/2011 11:10	8.64	12.13	622.39	41.75
7/14/2011 11:10	8.64	12.13	629.35	42.22
7/14/2011 11:11	8.64	12.13	634.36	43.19
7/14/2011 11:11	8.74	12.13	631.43	42.16
7/14/2011 11:12	8.74	12.13	631.43	42.30
7/14/2011 11:12	8.74	12.13	629.35	42.16
7/14/2011 11:13	8.74	12.13	629.35	42.74
7/14/2011 11:13	8.74	12.13	630.33	42.02
7/14/2011 11:14	8.74	12.13	627.40	41.26
7/14/2011 11:14	8.74	12.13	624.34	41.26
7/14/2011 11:15	8.74	12.13	626.42	42.23
7/14/2011 11:15	8.74	12.13	629.35	42.95
7/14/2011 11:16	8.74	12.13	632.28	42.68
7/14/2011 11:16	8.74	12.13	628.37	42.33
7/14/2011 11:17	8.74	12.13	624.22	42.45
7/14/2011 11:17	8.74	12.13	626.30	42.45
7/14/2011 11:18	8.74	12.13	628.25	43.55
7/14/2011 11:18	8.74	12.13	630.33	42.05
7/14/2011 11:19	8.74	12.13	625.32	41.63
7/14/2011 11:19	8.74	12.13	621.41	41.63
7/14/2011 11:20	8.74	12.13	623.37	42.79
7/14/2011 11:20	8.74	12.03	632.04	43.85

Client:	Waste Management	Plant:	Engine Plant	Location:	High Acres
Project #:	72873	Source:	3520 #1	Date:	7/14/2011

Method / Gas	3A / O2	3A / CO2	10 / CO	7E / NOx
Source	Engine #1	Engine #1	Engine #1	Engine #1
Calibration Drift Check				
Time	1:06 PM	1:06 PM	1:06 PM	1:06 PM
Span	21.97	18.64	914.4	98.72
Drift limit	< 3.0%	< 3.0%	< 3.0%	< 3.0%
Zero				
Initial	0.4	0.2	1.2	0.2
Final	0.5	0.2	3	1
Average (C_o)	0.45	0.2	2.1	0.6
Certified Value	0	0	0	0
% Drift	0.9%	0.0%	0.1%	0.2%
% Sys. Bias	1.8%	0.5%	0.2%	0.9%
Upscale (Cma)				
Upscale Gas:	Mid	Mid	Mid	Mid
Initial	12.25	10.9	507.3	50
Final	12.4	10.8	504	50.5
Average (C_m)	12.325	10.85	505.65	50.25
Certified Value	12.28	10.88	508	49.36
% Drift	0.0%	0.0%	-0.3%	-0.5%
% Sys. Bias	0.5%	-0.5%	-0.3%	0.7%
Run Data Calculations				
Number of Sample Points:	122	122	122	122
Average Concentration (C):	8.71	12.11	623.23	42.93
Drift Corrected Average (C_{gas})	8.54	12.16	626.62	42.08
Maximum Concentration:	8.82	12.35	634.36	45.09
Minumum Concentration:	8.60	11.94	610.30	40.75

DATE TIME	%	%	ppmvd	ppmvd
7/14/2011 12:05	8.71	12.25	623.37	43.06
7/14/2011 12:05	8.71	12.25	627.40	42.86
7/14/2011 12:06	8.71	12.25	627.27	43.77
7/14/2011 12:06	8.71	12.25	626.30	42.28
7/14/2011 12:07	8.71	12.25	622.39	42.05
7/14/2011 12:07	8.61	12.35	619.22	41.75
7/14/2011 12:08	8.61	12.35	621.41	43.19
7/14/2011 12:08	8.71	12.35	627.27	43.74
7/14/2011 12:09	8.71	12.24	629.35	42.90
7/14/2011 12:09	8.71	12.24	628.25	42.63
7/14/2011 12:10	8.71	12.24	625.32	42.38
7/14/2011 12:10	8.71	12.24	626.42	43.02
7/14/2011 12:11	8.71	12.24	621.41	42.45
7/14/2011 12:11	8.71	12.24	625.32	42.35
7/14/2011 12:12	8.71	12.24	622.39	42.00
7/14/2011 12:12	8.71	12.24	625.32	41.89
7/14/2011 12:13	8.71	12.24	614.33	42.24
7/14/2011 12:13	8.71	12.24	624.34	43.40
7/14/2011 12:14	8.71	12.14	631.30	43.67
7/14/2011 12:14	8.71	12.14	634.23	43.47
7/14/2011 12:15	8.71	12.14	628.37	42.30

7/14/2011 12:15	8.71	12.14	621.41	41.75
7/14/2011 12:16	8.71	12.14	620.19	42.38
7/14/2011 12:16	8.71	12.14	624.22	43.29
7/14/2011 12:17	8.71	12.14	626.30	43.61
7/14/2011 12:17	8.71	12.14	623.25	42.74
7/14/2011 12:18	8.71	12.14	623.25	42.69
7/14/2011 12:18	8.71	12.14	625.32	42.24
7/14/2011 12:19	8.71	12.14	623.37	42.84
7/14/2011 12:19	8.71	12.14	622.27	43.24
7/14/2011 12:20	8.71	12.14	625.44	43.39
7/14/2011 12:20	8.71	12.14	627.27	41.89
7/14/2011 12:21	8.71	12.14	616.29	41.19
7/14/2011 12:21	8.61	12.14	618.24	41.81
7/14/2011 12:22	8.61	12.14	621.41	42.35
7/14/2011 12:22	8.61	12.14	627.27	43.77
7/14/2011 12:23	8.72	12.14	625.32	44.02
7/14/2011 12:23	8.72	12.14	626.30	42.86
7/14/2011 12:24	8.72	12.14	626.30	42.72
7/14/2011 12:24	8.72	12.14	622.27	41.78
7/14/2011 12:25	8.62	12.14	621.41	42.89
7/14/2011 12:25	8.72	12.14	626.30	43.84
7/14/2011 12:26	8.72	12.14	630.33	44.40
7/14/2011 12:26	8.72	12.14	628.25	43.45
7/14/2011 12:27	8.72	12.14	628.25	42.82
7/14/2011 12:27	8.72	12.14	618.36	42.07
7/14/2011 12:28	8.72	12.14	619.34	42.07
7/14/2011 12:28	8.72	12.14	618.36	42.51
7/14/2011 12:29	8.72	12.14	618.36	41.74
7/14/2011 12:29	8.72	12.14	621.29	42.35
7/14/2011 12:30	8.72	12.14	622.27	42.78
7/14/2011 12:30	8.72	12.14	624.34	43.47
7/14/2011 12:31	8.72	12.14	625.32	43.57
7/14/2011 12:31	8.72	12.14	627.27	42.93
7/14/2011 12:32	8.72	12.14	626.30	42.79
7/14/2011 12:32	8.72	12.14	625.32	43.22
7/14/2011 12:33	8.72	12.04	627.40	43.05
7/14/2011 12:33	8.72	12.04	629.23	42.79
7/14/2011 12:34	8.72	12.04	626.30	42.28
7/14/2011 12:34	8.72	12.04	618.24	41.63
7/14/2011 12:35	8.72	12.04	620.32	42.16
7/14/2011 12:35	8.72	12.04	610.30	42.50
7/14/2011 12:36	8.72	12.04	619.34	43.04
7/14/2011 12:36	8.72	12.04	628.37	44.13
7/14/2011 12:37	8.72	12.04	633.26	44.27
7/14/2011 12:37	8.72	12.04	622.27	42.93
7/14/2011 12:38	8.72	12.04	622.27	41.44
7/14/2011 12:38	8.72	12.04	616.29	41.12
7/14/2011 12:39	8.61	12.14	618.24	42.84
7/14/2011 12:39	8.61	12.14	627.40	44.02
7/14/2011 12:40	8.71	12.04	626.30	44.05
7/14/2011 12:40	8.71	12.04	627.27	44.41
7/14/2011 12:41	8.71	12.04	628.25	43.55
7/14/2011 12:41	8.71	12.04	624.34	42.19
7/14/2011 12:42	8.71	12.04	616.29	41.70
7/14/2011 12:42	8.71	12.04	619.34	43.32

7/14/2011 12:43	8.71	12.04	626.30	44.99
7/14/2011 12:43	8.82	11.94	625.44	45.06
7/14/2011 12:44	8.82	11.94	629.35	43.82
7/14/2011 12:44	8.72	12.04	626.30	41.70
7/14/2011 12:45	8.61	12.04	614.09	41.08
7/14/2011 12:45	8.61	12.04	612.14	42.77
7/14/2011 12:46	8.61	12.04	621.41	44.79
7/14/2011 12:46	8.71	12.04	631.30	45.09
7/14/2011 12:47	8.81	12.04	634.36	43.95
7/14/2011 12:47	8.81	11.94	628.37	43.04
7/14/2011 12:48	8.71	12.04	621.29	40.75
7/14/2011 12:48	8.71	12.04	614.33	41.78
7/14/2011 12:49	8.71	12.04	617.26	43.05
7/14/2011 12:49	8.71	12.04	624.34	43.77
7/14/2011 12:50	8.71	12.04	629.47	44.92
7/14/2011 12:50	8.81	11.94	633.38	43.89
7/14/2011 12:51	8.81	11.94	629.35	43.69
7/14/2011 12:51	8.70	12.04	619.22	41.23
7/14/2011 12:52	8.70	12.04	611.16	41.41
7/14/2011 12:52	8.60	12.14	610.30	43.00
7/14/2011 12:53	8.60	12.04	619.22	44.96
7/14/2011 12:53	8.70	12.04	628.13	44.16
7/14/2011 12:54	8.81	12.04	632.28	43.93
7/14/2011 12:54	8.81	12.04	626.30	41.78
7/14/2011 12:55	8.70	12.14	617.26	41.12
7/14/2011 12:55	8.70	12.14	611.28	42.74
7/14/2011 12:56	8.70	12.14	620.32	44.16
7/14/2011 12:56	8.70	12.04	629.35	44.96
7/14/2011 12:57	8.80	12.04	624.22	43.51
7/14/2011 12:57	8.80	12.04	623.49	42.51
7/14/2011 12:58	8.80	12.04	616.16	40.89
7/14/2011 12:58	8.69	12.04	611.16	41.74
7/14/2011 12:59	8.69	12.15	615.31	43.45
7/14/2011 12:59	8.69	12.04	624.34	44.09
7/14/2011 13:00	8.69	12.04	629.47	44.76
7/14/2011 13:00	8.80	12.04	627.27	43.61
7/14/2011 13:01	8.80	12.04	620.07	42.46
7/14/2011 13:01	8.69	12.04	617.39	42.57
7/14/2011 13:02	8.69	12.04	616.29	42.42
7/14/2011 13:02	8.69	12.04	611.28	42.40
7/14/2011 13:03	8.69	12.04	617.26	43.44
7/14/2011 13:03	8.69	12.04	626.18	44.45
7/14/2011 13:04	8.69	12.04	629.23	44.21
7/14/2011 13:04	8.79	12.04	624.34	42.82
7/14/2011 13:05	8.79	12.04	622.39	42.68
7/14/2011 13:05	8.69	12.04	616.29	41.66

R/F = 2.33	**Total as C3H8**	551.62	**CH4**	1274.68
	Total as CH4	1285.28	**NMOC**	10.59

Run 1	THC	CH4
7/14/2011 8:32	561.59	1272.74
7/14/2011 8:32	517.15	1255.55
7/14/2011 8:33	530.09	1247.71
7/14/2011 8:33	527.41	1222.07
7/14/2011 8:34	552.07	1270.91
7/14/2011 8:34	533.15	1284.95
7/14/2011 8:35	518.25	1336.83
7/14/2011 8:35	539.25	1300.82
7/14/2011 8:36	565.74	1298.77
7/14/2011 8:36	573.07	1309.97
7/14/2011 8:37	576.36	1345.54
7/14/2011 8:37	632.28	1366.54
7/14/2011 8:38	756.32	1323.40
7/14/2011 8:38	534.73	1429.62
7/14/2011 8:39	531.68	1315.47
7/14/2011 8:39	550.48	1225.74
7/14/2011 8:40	508.97	1244.05
7/14/2011 8:40	565.87	1263.58
7/14/2011 8:41	538.27	1264.80
7/14/2011 8:41	612.01	1302.04
7/14/2011 8:42	520.94	1228.79
7/14/2011 8:42	523.38	1271.52
7/14/2011 8:43	583.08	1339.27
7/14/2011 8:43	496.28	1342.94
7/14/2011 8:44	523.62	1254.43
7/14/2011 8:44	525.21	1248.93
7/14/2011 8:45	506.65	1242.22
7/14/2011 8:45	520.94	1294.71
7/14/2011 8:46	523.01	1284.95
7/14/2011 8:46	525.82	1278.23
7/14/2011 8:47	534.37	1280.06
7/14/2011 8:47	515.57	1304.48
7/14/2011 8:48	641.19	1347.21
7/14/2011 8:48	546.70	1256.26
7/14/2011 8:49	522.16	1242.83
7/14/2011 8:49	553.90	1235.50
7/14/2011 8:50	569.53	1259.92
7/14/2011 8:50	526.19	1228.79
7/14/2011 8:51	627.27	1349.65
7/14/2011 8:51	560.25	1407.03
7/14/2011 8:52	597.00	1253.20
7/14/2011 8:52	561.23	1244.66
7/14/2011 8:53	516.54	1286.17
7/14/2011 8:53	537.42	1386.28
7/14/2011 8:54	572.34	1276.40
7/14/2011 8:54	515.32	1271.52
7/14/2011 8:55	529.00	1231.23
7/14/2011 8:55	621.66	1248.32
7/14/2011 8:56	519.23	1284.95
7/14/2011 8:56	574.05	1206.81

Run 1	THC	CH4
7/14/2011 8:57	514.96	1259.31
7/14/2011 8:57	584.06	1320.96
7/14/2011 8:58	648.76	1268.47
7/14/2011 8:58	638.02	1250.76
7/14/2011 8:59	569.53	1288.61
7/14/2011 8:59	511.66	1260.53
7/14/2011 9:00	691.12	1218.41
7/14/2011 9:00	586.25	1263.58
7/14/2011 9:01	527.04	1346.60
7/14/2011 9:01	524.72	1327.07
7/14/2011 9:02	551.46	1220.24
7/14/2011 9:02	523.38	1205.59
7/14/2011 9:03	522.04	1302.65
7/14/2011 9:03	542.43	1301.43
7/14/2011 9:04	585.89	1262.97
7/14/2011 9:04	517.28	1309.97
7/14/2011 9:05	521.06	1247.71
7/14/2011 9:05	516.67	1250.15
7/14/2011 9:06	540.59	1211.70
7/14/2011 9:06	576.00	1226.96
7/14/2011 9:07	515.08	1214.75
7/14/2011 9:07	628.62	1316.69
7/14/2011 9:08	576.85	1330.73
7/14/2011 9:08	559.64	1261.14
7/14/2011 9:09	519.72	1244.05
7/14/2011 9:09	537.05	1320.35
7/14/2011 9:10	504.82	1240.39
7/14/2011 9:10	547.06	1278.66
7/14/2011 9:11	552.68	1291.66
7/14/2011 9:11	534.49	1245.27
7/14/2011 9:12	503.48	1288.00
7/14/2011 9:12	520.57	1236.72
7/14/2011 9:13	593.09	1228.18
7/14/2011 9:13	516.79	1259.92
7/14/2011 9:14	572.82	1273.96
7/14/2011 9:14	560.01	1229.40
7/14/2011 9:15	535.22	1247.71
7/14/2011 9:15	510.56	1242.83
7/14/2011 9:16	599.93	1186.67
7/14/2011 9:16	577.59	1298.99
7/14/2011 9:17	496.77	1317.91
7/14/2011 9:17	512.88	1242.22
7/14/2011 9:18	604.69	1246.49
7/14/2011 9:18	582.22	1272.13
7/14/2011 9:19	544.74	1234.28
7/14/2011 9:19	526.55	1258.70
7/14/2011 9:20	562.33	1232.45
7/14/2011 9:20	526.68	1288.99
7/14/2011 9:21	552.07	1298.99
7/14/2011 9:21	518.50	1281.89
7/14/2011 9:22	574.66	1250.15
7/14/2011 9:22	514.83	1311.81
7/14/2011 9:23	493.47	1322.22
7/14/2011 9:23	575.75	1330.12
7/14/2011 9:24	724.21	1267.24
7/14/2011 9:24	533.39	1289.22
7/14/2011 9:25	497.99	1237.33

Run 1	THC	CH4
7/14/2011 9:25	637.16	1289.98
7/14/2011 9:26	527.77	1284.95
7/14/2011 9:26	512.03	1317.91
7/14/2011 9:27	556.83	1297.77
7/14/2011 9:27	533.02	1234.89
7/14/2011 9:28	515.93	1253.20
7/14/2011 9:28	565.01	1277.62
7/14/2011 9:29	513.12	1216.58
7/14/2011 9:29	668.66	1230.01
7/14/2011 9:30	536.57	1247.71
7/14/2011 9:30	505.92	1324.01
7/14/2011 9:31	514.22	1262.36
7/14/2011 9:31	546.21	1226.35
7/14/2011 9:32	522.89	1262.36
7/14/2011 9:32	527.16	1255.45

R/F = 2.33	**Total as C3H8**	552.14	**CH4**	1272.74
	Total as CH4	1286.49	**NMOC**	13.75

Run 2	THC	CH4
7/14/2011 10:20	572.09	1244.05
7/14/2011 10:20	560.25	1283.73
7/14/2011 10:21	548.16	1237.33
7/14/2011 10:21	524.23	1286.17
7/14/2011 10:22	535.95	1266.63
7/14/2011 10:22	578.56	1233.06
7/14/2011 10:23	542.43	1214.75
7/14/2011 10:23	575.02	1347.82
7/14/2011 10:24	545.23	1242.83
7/14/2011 10:24	542.67	1382.00
7/14/2011 10:25	546.94	1329.51
7/14/2011 10:25	584.42	1311.20
7/14/2011 10:26	555.61	1278.23
7/14/2011 10:26	564.77	1285.56
7/14/2011 10:27	531.07	1252.59
7/14/2011 10:27	535.83	1276.40
7/14/2011 10:28	532.66	1474.18
7/14/2011 10:28	507.63	1286.78
7/14/2011 10:29	522.04	1250.15
7/14/2011 10:29	585.40	1262.36
7/14/2011 10:30	551.46	1234.89
7/14/2011 10:30	580.88	1300.21
7/14/2011 10:31	529.36	1244.66
7/14/2011 10:31	566.11	1248.93
7/14/2011 10:32	613.60	1297.16
7/14/2011 10:32	527.53	1294.10
7/14/2011 10:33	515.08	1233.06
7/14/2011 10:33	512.64	1280.06
7/14/2011 10:34	524.84	1205.59
7/14/2011 10:34	640.34	1364.91
7/14/2011 10:35	540.59	1296.54
7/14/2011 10:35	570.75	1296.54
7/14/2011 10:36	542.30	1303.26
7/14/2011 10:36	531.19	1250.76
7/14/2011 10:37	516.79	1264.80
7/14/2011 10:37	517.76	1245.88
7/14/2011 10:38	543.16	1265.41
7/14/2011 10:38	553.90	1364.91
7/14/2011 10:39	573.43	1228.79
7/14/2011 10:39	565.62	1213.53
7/14/2011 10:40	558.05	1266.63
7/14/2011 10:40	562.45	1423.51
7/14/2011 10:41	572.09	1293.49
7/14/2011 10:41	548.65	1248.32
7/14/2011 10:42	510.56	1226.96
7/14/2011 10:42	518.01	1292.88
7/14/2011 10:43	549.02	1309.36
7/14/2011 10:43	534.86	1332.56
7/14/2011 10:44	530.34	1219.63
7/14/2011 10:44	526.07	1242.22
7/14/2011 10:45	538.15	1237.94

Run 2	THC	CH4
7/14/2011 10:45	608.84	1318.52
7/14/2011 10:46	559.76	1234.28
7/14/2011 10:46	527.53	1319.13
7/14/2011 10:47	518.74	1262.97
7/14/2011 10:47	519.84	1251.98
7/14/2011 10:48	540.96	1213.53
7/14/2011 10:48	518.01	1230.62
7/14/2011 10:49	588.45	1300.82
7/14/2011 10:49	573.31	1291.05
7/14/2011 10:50	524.23	1266.63
7/14/2011 10:50	534.12	1236.72
7/14/2011 10:51	588.21	1246.49
7/14/2011 10:51	530.70	1308.14
7/14/2011 10:52	535.47	1264.19
7/14/2011 10:52	516.67	1251.98
7/14/2011 10:53	635.58	1310.58
7/14/2011 10:53	539.98	1273.96
7/14/2011 10:54	538.76	1244.05
7/14/2011 10:54	516.05	1314.86
7/14/2011 10:55	608.23	1259.31
7/14/2011 10:55	518.98	1277.62
7/14/2011 10:56	542.30	1248.93
7/14/2011 10:56	695.76	1260.53
7/14/2011 10:57	559.76	1298.99
7/14/2011 10:57	520.82	1349.04
7/14/2011 10:58	517.64	1195.21
7/14/2011 10:58	515.81	1216.58
7/14/2011 10:59	543.16	1279.45
7/14/2011 10:59	573.56	1272.13
7/14/2011 11:00	543.89	1298.38
7/14/2011 11:00	537.54	1198.27
7/14/2011 11:01	626.42	1180.56
7/14/2011 11:01	565.26	1281.28
7/14/2011 11:02	547.80	1285.56
7/14/2011 11:02	528.87	1335.00
7/14/2011 11:03	530.22	1222.07
7/14/2011 11:03	519.84	1216.58
7/14/2011 11:04	594.07	1289.83
7/14/2011 11:04	627.76	1277.62
7/14/2011 11:05	571.73	1292.88
7/14/2011 11:05	518.01	1313.64
7/14/2011 11:06	510.81	1211.70
7/14/2011 11:06	508.12	1195.82
7/14/2011 11:07	529.36	1208.64
7/14/2011 11:07	545.23	1294.10
7/14/2011 11:08	634.23	1386.89
7/14/2011 11:08	510.93	1345.99
7/14/2011 11:09	505.80	1169.58
7/14/2011 11:09	501.04	1195.82
7/14/2011 11:10	551.22	1257.48
7/14/2011 11:10	609.69	1265.41
7/14/2011 11:11	551.09	1324.01
7/14/2011 11:11	564.77	1266.02
7/14/2011 11:12	721.89	1212.92
7/14/2011 11:12	578.81	1276.40
7/14/2011 11:13	609.21	1386.28
7/14/2011 11:13	510.07	1215.97
7/14/2011 11:14	533.15	1261.75

Run 2	THC	CH4
7/14/2011 11:14	533.27	1219.63
7/14/2011 11:15	546.09	1232.45
7/14/2011 11:15	573.56	1306.31
7/14/2011 11:16	525.21	1280.06
7/14/2011 11:16	514.35	1261.14
7/14/2011 11:17	549.51	1288.00
7/14/2011 11:17	613.97	1383.23
7/14/2011 11:18	568.06	1282.51
7/14/2011 11:18	505.80	1192.77
7/14/2011 11:19	517.52	1236.11
7/14/2011 11:19	546.70	1226.96
7/14/2011 11:20	678.79	1313.03
7/14/2011 11:20	533.88	1314.86

R/F = 2.33	**Total as C3H8**	539.68	**CH4**	1249.04
	Total as CH4	1257.45	**NMOC**	8.41

Run 3	THC	CH4
7/14/2011 12:05	612.38	1217.80
7/14/2011 12:05	561.35	1328.29
7/14/2011 12:06	578.68	1277.62
7/14/2011 12:06	512.76	1228.79
7/14/2011 12:07	490.05	1158.59
7/14/2011 12:07	546.09	1161.03
7/14/2011 12:08	576.98	1214.14
7/14/2011 12:08	542.06	1363.08
7/14/2011 12:09	520.69	1269.69
7/14/2011 12:09	510.32	1242.83
7/14/2011 12:10	523.38	1349.04
7/14/2011 12:10	536.69	1361.86
7/14/2011 12:11	557.32	1223.29
7/14/2011 12:11	511.05	1289.83
7/14/2011 12:12	510.56	1191.55
7/14/2011 12:12	504.58	1148.21
7/14/2011 12:13	538.03	1258.09
7/14/2011 12:13	574.78	1313.03
7/14/2011 12:14	574.66	1366.74
7/14/2011 12:14	565.01	1257.48
7/14/2011 12:15	529.73	1225.13
7/14/2011 12:15	595.04	1235.50
7/14/2011 12:16	598.22	1192.77
7/14/2011 12:16	559.15	1274.57
7/14/2011 12:17	607.74	1274.57
7/14/2011 12:17	538.64	1240.39
7/14/2011 12:18	536.44	1223.29
7/14/2011 12:18	589.43	1203.15
7/14/2011 12:19	576.73	1238.55
7/14/2011 12:19	541.81	1345.99
7/14/2011 12:20	512.88	1223.90
7/14/2011 12:20	572.70	1203.76
7/14/2011 12:21	507.39	1136.00
7/14/2011 12:21	538.15	1173.85
7/14/2011 12:22	518.25	1275.18
7/14/2011 12:22	526.19	1253.82
7/14/2011 12:23	599.93	1306.31
7/14/2011 12:23	508.36	1241.00
7/14/2011 12:24	558.42	1288.56
7/14/2011 12:24	510.81	1266.54
7/14/2011 12:25	526.92	1297.77
7/14/2011 12:25	610.18	1251.37
7/14/2011 12:26	675.62	1275.79
7/14/2011 12:26	561.84	1298.99
7/14/2011 12:27	513.86	1308.75
7/14/2011 12:27	535.10	1204.98
7/14/2011 12:28	537.42	1176.90
7/14/2011 12:28	520.08	1223.90
7/14/2011 12:29	526.31	1199.49
7/14/2011 12:29	568.06	1226.96
7/14/2011 12:30	553.90	1272.13

Run 3	THC	CH4
7/14/2011 12:30	499.94	1240.39
7/14/2011 12:31	509.58	1230.62
7/14/2011 12:31	507.75	1233.06
7/14/2011 12:32	513.61	1211.09
7/14/2011 12:32	540.96	1321.57
7/14/2011 12:33	550.48	1261.14
7/14/2011 12:33	522.65	1270.30
7/14/2011 12:34	512.64	1242.22
7/14/2011 12:34	505.31	1244.66
7/14/2011 12:35	497.13	1159.20
7/14/2011 12:35	496.89	1194.60
7/14/2011 12:36	576.12	1264.80
7/14/2011 12:36	631.18	1367.35
7/14/2011 12:37	524.48	1352.09
7/14/2011 12:37	504.70	1184.23
7/14/2011 12:38	491.27	1181.17
7/14/2011 12:38	498.96	1178.12
7/14/2011 12:39	532.29	1195.21
7/14/2011 12:39	595.17	1223.29
7/14/2011 12:40	557.08	1378.95
7/14/2011 12:40	567.21	1333.17
7/14/2011 12:41	491.88	1295.93
7/14/2011 12:41	517.28	1141.50
7/14/2011 12:42	528.26	1149.43
7/14/2011 12:42	585.15	1210.47
7/14/2011 12:43	633.62	1319.13
7/14/2011 12:43	605.79	1370.41
7/14/2011 12:44	493.84	1223.29
7/14/2011 12:44	482.85	1128.68
7/14/2011 12:45	479.55	1126.24
7/14/2011 12:45	498.35	1148.21
7/14/2011 12:46	554.88	1248.93
7/14/2011 12:46	560.37	1379.56
7/14/2011 12:47	542.06	1336.83
7/14/2011 12:47	485.66	1184.84
7/14/2011 12:48	521.91	1125.63
7/14/2011 12:48	503.48	1157.37
7/14/2011 12:49	509.46	1117.69
7/14/2011 12:49	525.94	1215.36
7/14/2011 12:50	613.23	1368.58
7/14/2011 12:50	522.89	1390.55
7/14/2011 12:51	500.18	1388.76
7/14/2011 12:51	490.54	1366.75
7/14/2011 12:52	494.57	1344.53
7/14/2011 12:52	534.73	1332.11
7/14/2011 12:53	542.30	1333.17
7/14/2011 12:53	655.11	1390.55
7/14/2011 12:54	508.85	1248.32
7/14/2011 12:54	481.63	1124.40
7/14/2011 12:55	544.74	1093.88
7/14/2011 12:55	521.18	1184.84
7/14/2011 12:56	598.34	1265.41
7/14/2011 12:56	584.67	1339.27
7/14/2011 12:57	625.57	1345.38
7/14/2011 12:57	500.43	1221.46
7/14/2011 12:58	485.66	1117.69
7/14/2011 12:58	488.10	1135.39
7/14/2011 12:59	517.76	1280.67

Run 3	THC	CH4
7/14/2011 12:59	635.82	1280.67
7/14/2011 13:00	529.00	1340.50
7/14/2011 13:00	518.98	1232.45
7/14/2011 13:01	511.66	1210.47
7/14/2011 13:01	564.52	1156.76
7/14/2011 13:02	506.29	1184.84
7/14/2011 13:02	508.97	1225.74
7/14/2011 13:03	576.24	1292.27
7/14/2011 13:03	531.19	1337.44
7/14/2011 13:04	601.15	1255.04
7/14/2011 13:04	514.59	1375.90
7/14/2011 13:05	493.71	1173.24
7/14/2011 13:05	479.67	1117.69

VELOCITY AND VOLUMETRIC FLOW DETERMINATION SPREADSHEET

Client:	Waste Management	Source:	Engine #1	Date:	7/14/2011
Plant:	High Acres	Location:	Outlet	Run #:	1
Project #:	72873	Operator:	SC/KJ	Method:	2

EQUIPMENT IDS AND INFO		TEMPERATURE / PRESSURE			STACK DATA		
		$Temperature_{STD}$:	68	(ºF)	Shape:	Circle	
Barometer Con. #:	BE04199	$Temperature_{AMBIENT}$:	64	(°F)	Area:	1.40	(ft^2)
		$Pressure_{BARAMETRIC}$:	30.24	(in. Hg.)	Diameter:	16.00	(in.)
Pitot Con. #:	4193A						
		$Pressure_{STATIC}$:	10.20	(in. H20.)			
C_P	0.84	**RUN VALUES**			**TEST INFORMATION**		
		Bws:	0.148	(fraction)	Number of Ports:	2	
Meter Box:	BE04908	CO_2:	12.30	(%)	Points / Port	8	
		O_2:	8.50	(%)	Reads / Point	1	

N_2:	79.20	(%)	
Md:	30.31	lb/lb-mole	
Ms:	28.49	lb/lb-mole	

Run 1A	
Vs - ft/sec.	156.61
Qa - ACFM	13155.2
Qs - WSCFM	5127.8
Qs - DSCFM	4368.9

Time	Title
8:34	Run 1A

Traverse Pt. No.	Distance (inches)	T_S (°F)	ΔP	SQRT(ΔP)	Null Angle
1	0.51	945	3.00	1.73	4
2	1.68	940	2.90	1.70	5
3	3.10	940	3.10	1.76	8
4	5.17	938	3.00	1.73	9
5	10.83	934	3.10	1.76	8
6	12.90	941	3.10	1.76	8
7	14.32	944	3.10	1.76	4
8	15.49	946	3.10	1.76	3
1	0.51	944	2.80	1.67	2
2	1.68	944	3.00	1.73	3
3	3.10	944	3.00	1.73	1
4	5.17	940	3.10	1.76	4
5	10.83	938	3.00	1.73	3
6	12.90	944	3.05	1.75	5
7	14.32	949	2.80	1.67	5
8	15.49	950	2.70	1.64	8
Average		943	2.99	1.73	5

VELOCITY AND VOLUMETRIC FLOW DETERMINATION SPREADSHEET

Client:	Waste Management	Source:	Engine #1	Date:	7/14/2011
Plant:	High Acres	Location:	Outlet	Run #:	2
Project #:	72873	Operator:	SC KJ	Method:	2

EQUIPMENT IDS AND INFO		TEMPERATURE / PRESSURE			STACK DATA		
		$Temperature_{STD}$:	68	(ºF)	Shape:	Circle	
Barometer Con. #:	BE04199	$Temperature_{AMBIENT}$:	64	(°F)	Area:	1.40	(ft^2)
		$Pressure_{BARAMETRIC}$:	30.24	(in. Hg.)	Diameter:	16.00	(in.)
Pitot Con. #:	4193A						
		$Pressure_{STATIC}$:	10.20	(in. H20.)			
C_P	0.84	**RUN VALUES**			**TEST INFORMATION**		
		Bws:	0.141	(fraction)	Number of Ports:	2	
Meter Box:	BE04908	CO_2:	12.20	(%)	Points / Port	8	
		O_2:	8.50	(%)	Reads / Point	1	

N_2:	79.30	(%)			
Md:	30.29	lb/lb-mole			
Ms:	28.56	lb/lb-mole			

Run 2A	
Vs - ft/sec.	155.75
Qa - ACFM	13083.0
Qs - WSCFM	5143.7
Qs - DSCFM	4418.4

Time	Title
10:00	Run 2A

Traverse Pt. No.	Distance (inches)	T_S (°F)	ΔP	SQRT(ΔP)	Null Angle
1	0.51	941	2.20	1.48	
2	1.68	938	3.10	1.76	
3	3.10	941	3.10	1.76	
4	5.17	938	3.20	1.79	
5	10.83	931	3.30	1.82	
6	12.90	939	3.10	1.76	
7	14.32	945	3.10	1.76	
8	15.49	947	2.90	1.70	
1	0.51	912	2.90	1.70	
2	1.68	900	3.10	1.76	
3	3.10	901	3.10	1.76	
4	5.17	912	2.90	1.70	
5	10.83	929	3.20	1.79	
6	12.90	938	3.10	1.76	
7	14.32	942	2.80	1.67	
8	15.49	944	2.90	1.70	
Average		931	3.00	1.73	

VELOCITY AND VOLUMETRIC FLOW DETERMINATION SPREADSHEET

Client:	Waste Management	Source:	Engine #1	Date:	7/14/2011
Plant:	High Acres	Location:	Outlet	Run #:	3
Project #:	72873	Operator:	SC KJ	Method:	2

EQUIPMENT IDS AND INFO		TEMPERATURE / PRESSURE			STACK DATA		
		$Temperature_{STD}$:	68	(ºF)	Shape:	Circle	
Barometer Con. #:	BE04199	$Temperature_{AMBIENT}$:	75	(°F)	Area:	1.40	(ft^2)
		$Pressure_{BARAMETRIC}$:	30.24	(in. Hg.)	Diameter:	16.00	(in.)
Pitot Con. #:	4193A						
		$Pressure_{STATIC}$:	10.20	(in. H20.)			
C_P	0.84	RUN VALUES			TEST INFORMATION		
		Bws:	0.144	(fraction)	Number of Ports:	2	
Meter Box:	BE04908	CO_2:	12.20	(%)	Points / Port	8	
		O_2:	8.70	(%)	Reads / Point	1	

N_2:	79.10	(%)				
Md:	30.30	lb/lb-mole				
Ms:	28.53	lb/lb-mole				

Run 3A			
Vs - ft/sec.	152.58		
Qa - ACFM	12816.7		
Qs - WSCFM	5135.0		
Qs - DSCFM	4395.5		

Time	Title
11:55	Run 3A

Traverse Pt. No.	Distance (inches)	T_S (°F)	ΔP	SQRT(ΔP)	Null Angle
1	0.51	800	1.70	1.30	
2	1.68	802	3.30	1.82	
3	3.10	902	3.20	1.79	
4	5.17	925	3.20	1.79	
5	10.83	938	3.10	1.76	
6	12.90	942	3.00	1.73	
7	14.32	944	2.80	1.67	
8	15.49	944	3.00	1.73	
1	0.51	836	2.50	1.58	
2	1.68	841	2.80	1.67	
3	3.10	900	3.20	1.79	
4	5.17	941	3.30	1.82	
5	10.83	940	3.10	1.76	
6	12.90	941	2.90	1.70	
7	14.32	944	3.10	1.76	
8	15.49	945	3.00	1.73	
Average		905	2.95	1.71	

MOISTURE SAMPLING DATA SHEET

Client:	Waste Management	**Source:**	Engine #1	**Date:**	7/14/2011
Plant:	High Acres	**Location:**	Outlet	**Run #:**	1
Project #:	72873	**Operator:**	SC/KJ	**Method:**	4

Sample Volume, Standard Conditions

$V_{m(std)} = V_m Y((T_{std} P_m) / (T_m P_{std}))$ $V_{m(std)} =$ 43.12571 DSCF

Water Vapor Volume Collected

$V_{wc(std)} = .04706 (W_f - W_i)$ $V_{wc(std)} =$ 7.5296 ft^3/g

Moisture Volume Fraction of Stack Gas

$B_{ws} = V_{wc(std)} / (V_{wc(std)} + V_{m(std)})$ $B_{ws} =$ 0.148644

Saturated Vapor Pressure at Avg. Stack Temperature

SVP= 29.92 in. Hg

B_{ws} VP

B_{ws} VP = SVP/P_s B_{ws} VP = 0.9636

Min B_{ws} or B_{ws} VP

If B_{ws} > B_{ws} VP, then B_{ws} VP MIN B_{ws} or B_{ws} VP = 0.1486

** The Saturation Vapor Pressure Chart was obtain from Table 3-301 on page 3-237 from Perry's Chemical Engineering Handbook Sixth Edition and the units were changed from pounds per square inch to inches of mercury

MOISTURE SAMPLING DATA SHEET

Client:	Waste Management	Source:	Engine #1	Date:	07/14/11
Plant:	High Acres	Location:	Outlet	Run #:	1
Project #:	72873	Operator:	SC/KJ	Method:	4

Equipment ID's and Info				Temperature and Pressure			Stack Data				Train Weight	
Filter:	Q385C	Meter Box:	BE04908	Tstd:	68	F	Shape:	Circle				
Barometer:	BE04199	Meter Y:	0.9814	Pbar:	30.24	in. Hg	Area:	1.40	(ft2)	Wi	3461.0	g
				Pstatic:	11.00	in. H2O	Diameter:	16.00	(in.)	Wf	3621.0	g

Leak Check Analysis					Test Information	
Meter Initial:	0.005	cfm@	15	in. Hg	Number of Ports:	1
Meter Final:	0.002	cfm@	5	in. Hg	Points/Port:	1
					Reads/Point:	12
					Time/Reading:	5.00 (min)
					Total Time:	60 (min)

Trvs. Pts.	Sample Time	Clock Time (24hr)	ΔH (in. H_2O)	Meter Vm (cf)	Temperatures (F) Meter In	Meter Out	Probe	Exit	Stack	Vac. in. Hg
1		8:31:00	1.73	662.452	63	62		67	940	2
1	0:05:00	8:36:00	1.73	665.000	63	62		56		2
1	0:10:00	8:41:00	1.73	669.000	65	63		58		2
1	0:15:00	8:46:00	1.73	674.000	69	63		62		2
1	0:20:00	8:51:00	1.73	677.000	70	63		65		2
1	0:25:00	8:56:00	1.73	680.400	72	63		67		2
1	0:30:00	9:01:00	1.73	683.600	73	64		58		2
1	0:35:00	9:06:00	1.73	687.700	74	64		56		2
1	0:40:00	9:11:00	1.73	691.200	76	65		54		2
1	0:45:00	9:16:00	1.73	694.900	77	66		54		2
1	0:50:00	9:21:00	1.73	698.500	77	66		54		2
1	0:55:00	9:26:00	1.73	702.100	78	67		55		2
	1:00:00	9:31:00		705.724						
			Avg. 1.73	Total Vol. 43.272	Avg. 71.4	Avg. 64.0	Avg.	Avg. 58.8	Avg. 940	
						Avg. Tm 67.7				

MOISTURE SAMPLING DATA SHEET

Client:	Waste Management	**Source:**	Engine #1	**Date:**	7/14/2011
Plant:	High Acres	**Location:**	Outlet	**Run #:**	2
Project #:	72873	**Operator:**	SC/KJ	**Method:**	4

Sample Volume, Standard Conditions

$V_{m(std)} = V_m Y((T_{std} P_m) / (T_m P_{std}))$ $V_{m(std)} =$ 42.83641 DSCF

Water Vapor Volume Collected

$V_{wc(std)} = .04706 (W_f - W_i)$ $V_{wc(std)} =$ 7.059 ft^3/g

Moisture Volume Fraction of Stack Gas

$B_{ws} = V_{wc(std)} / (V_{wc(std)} + V_{m(std)})$ $B_{ws} =$ 0.141476

Saturated Vapor Pressure at Avg. Stack Temperature

SVP= 29.92 in. Hg

B_{ws} VP

B_{ws} VP = SVP/P_s B_{ws} VP = 0.9655

Min B_{ws} or B_{ws} VP

If $B_{ws} > B_{ws}$ VP, then B_{ws} VP MIN B_{ws} or B_{ws} VP = 0.1415

** The Saturation Vapor Pressure Chart was obtain from Table 3-301 on page 3-237 from Perry's Chemical Engineering Handbook Sixth Edition and the units were changed from pounds per square inch to inches of mercury

MOISTURE SAMPLING DATA SHEET

Client:	Waste Management	Source:	Engine #1	Date:	07/14/11
Plant:	High Acres	Location:	Outlet	Run #:	2
Project #:	72873	Operator:	SC/KJ	Method:	4

Equipment ID's and Info				Temperature and Pressure			Stack Data				Train Weight	
Filter:	Q386C	Meter Box:	BE04908	Tstd:	68	F	Shape:	Circle				
Barometer:	BE04199	Meter Y:	0.9814	Pbar:	30.24	in. Hg	Area:	1.40	(ft2)	Wi	3621.0 g	
				Pstatic:	10.20	in. H2O	Diameter:	16.00	(in.)	Wf	3771.0 g	

Leak Check Analysis					Test Information	
Meter Initial:	0.002	cfm@	15	in. Hg	Number of Ports:	1
Meter Final:	0.001	cfm@	8	in. Hg	Points/Port:	1
					Reads/Point:	12
					Time/Reading:	5.00 (min)
					Total Time:	60 (min)

Trvs. Pts.	Sample Time	Clock Time (24hr)	ΔH (in. H_2O)	Meter Vm (cf)	Temperatures (F) Meter In	Meter Out	Probe	Exit	Stack	Vac. in. Hg
1		10:21:00	1.73	706.665	68	67		68	941	2
1	0:05:00	10:26:00	1.73	710.000	69	67		57		2
1	0:10:00	10:31:00	1.73	713.200	71	67		58		2
1	0:15:00	10:36:00	1.73	716.300	74	67		64		2
1	0:20:00	10:41:00	1.73	720.400	76	67		62		2
1	0:25:00	10:46:00	1.73	724.000	77	68		56		2
1	0:30:00	10:51:00	1.73	727.600	78	69		55		2
1	0:35:00	10:56:00	1.73	731.300	79	69		55		2
1	0:40:00	11:01:00	1.73	735.000	80	70		55		2
1	0:45:00	11:06:00	1.73	738.600	81	70		55		2
1	0:50:00	11:11:00	1.73	742.200	81	71		55		2
1	0:55:00	11:16:00	1.73	745.900	82	72		55		2
	1:00:00	11:21:00		750.037						
			Avg. 1.73	Total Vol. 43.372	Avg. 76.3	Avg. 68.7	Avg.	Avg. 58	Avg. 941	
						Avg. Tm 72.5				

MOISTURE SAMPLING DATA SHEET

Client:	Waste Management	**Source:**	Engine #1	**Date:**	7/14/2011
Plant:	High Acres	**Location:**	Outlet	**Run #:**	3
Project #:	72873	**Operator:**	SC/KJ	**Method:**	4

Sample Volume, Standard Conditions

$V_{m(std)} = V_m Y((T_{std} P_m) / (T_m P_{std}))$ $V_{m(std)} =$ 43.06374 DSCF

Water Vapor Volume Collected

$V_{wc(std)} = .04706 (W_f - W_i)$ $V_{wc(std)} =$ 7.27077 ft^3/g

Moisture Volume Fraction of Stack Gas

$B_{ws} = V_{wc(std)} / (V_{wc(std)} + V_{m(std)})$ $B_{ws} =$ 0.144449

Saturated Vapor Pressure at Avg. Stack Temperature

SVP= 29.92 in. Hg

B_{ws} VP

B_{ws} VP = SVP/P_s B_{ws} VP = 0.9655

Min B_{ws} or B_{ws} VP

If $B_{ws} > B_{ws}$ VP, then B_{ws} VP MIN B_{ws} or B_{ws} VP = 0.1444

** The Saturation Vapor Pressure Chart was obtain from Table 3-301 on page 3-237 from Perry's Chemical Engineering Handbook Sixth Edition and the units were changed from pounds per square inch to inches of mercury

MOISTURE SAMPLING DATA SHEET

Client:	Waste Management	Source:	Engine #1	Date:	07/14/11
Plant:	High Acres	Location:	Outlet	Run #:	3
Project #:	72873	Operator:	SC/KJ	Method:	4

Equipment ID's and Info				Temperature and Pressure			Stack Data				Train Weight	
Filter:	Q387C	Meter Box:	BE04908	Tstd:	68	F	Shape:	Circle				
Barometer:	BE04199	Meter Y:	0.9814	Pbar:	30.24	in. Hg	Area:	1.40	(ft2)	Wi	3771.0	g
				Pstatic:	10.20	in. H2O	Diameter:	16.00	(in.)	Wf	3925.5	g

Leak Check Analysis					Test Information		
Meter Initial:	0.005	cfm@	15	in. Hg	Number of Ports:	1	
Meter Final:	0.002	cfm@	6	in. Hg	Points/Port:	1	
					Reads/Point:	12	
					Time/Reading:	5.00	(min)
					Total Time:	60	(min)

Trvs. Pts.	Sample Time	Clock Time (24hr)	ΔH (in. H_2O)	Meter Vm (cf)	Temperatures (F) Meter In	Meter Out	Probe	Exit	Stack	Vac. in. Hg
1		12:05:00	1.73	750.384	71	71		71	940	2
1	0:05:00	12:10:00	1.73	754.100	72	70		62		2
1	0:10:00	12:15:00	1.73	757.700	74	70		57		2
1	0:15:00	12:20:00	1.73	761.300	77	70		58		2
1	0:20:00	12:25:00	1.73	764.900	79	71		58		2
1	0:25:00	12:30:00	1.73	768.800	80	71		59		2
1	0:30:00	12:35:00	1.73	772.200	81	72		60		2
1	0:35:00	12:40:00	1.73	776.000	81	72		60		2
1	0:40:00	12:45:00	1.73	779.600	82	73		61		2
1	0:45:00	12:50:00	1.73	783.000	83	73		61		2
1	0:50:00	12:55:00	1.73	786.900	84	74		62		2
1	0:55:00	13:00:00	1.73	790.500	85	74		63		2
	1:00:00	13:05:00		794.225						
			Avg. 1.73	Total Vol. 43.841	Avg. 79.1	Avg. 71.8	Avg.	Avg. 61.0	Avg. 941	
						Avg. Tm 75.4				

07/20/2011

072873

SC

NMOC Calculations

Run 1 Response Factor C_3H_8 to CH_4 = 2.33

Total as C_3H_8 = 551.6

Total as CH_4 = 1285.2

CH_4 = 1274.7

NMOC = 10.5 ppmvw $ppmv_d = \frac{ppmw}{(1-BWS)}$

Stack Moisture 14.9 % 10.5/(1-0.149) = 12.3 ppmvd

NMOC = 12.3 ppmvd

Stack Flow Rate = 4370 dscfm

$lb/hr = 12.3 \times \frac{16}{24.055} \times 4370 \times 60 / 454000 / 35.32$

lb/hr = 0.13

break hp = 2233

$lb/BHP\text{-}hr = lb/scf \times 60 \times dscfm \times 454 / hp$

$12.3 ppm \times \frac{16}{385.1 \times 10^{-6}} = 5.11^{-7}$ lb/scf

$5.11^{-7} \times 60 \times 4370 \times 454 / 2233$

lb/BHPhr = 0.03

07/20/2011

072873

SC

NMOC Calculations

RUN 2 R/F = 2.33

Total as C_3H_8 = 552.1

Total as CH_4 = 1286.5

CH_4 = 1272.7

NMOC = 13.8 ppmvw

Stack Moisture = 14.1% PPMvd = $\frac{13.8}{(1-0.141)}$ = 16.1 ppmvd

NMOC = 16.1 ppmvd Stack Flow Rate 4420

$16.1 \times \frac{16}{24.055} \times 4420 \times 60 / 454000 / 35.32$

lb/hr = 0.18

BHp = 2233

$16.1 \times \frac{16}{385.16}$ = lb/scf $\times 60 \times 4420 \times 454 / 2233$

lb/BHp-hr = 0.04

RUN 3

Total as C_3H_8 = 539.7

Total as CH_4 = 1257.4

CH_4 = 1249.0

NMOC = 8.4 ppmvw NMOC = 9.8 ppmvd

Stack moisture = 14.4% Stack Flow Rate = 4400 dscfm

$9.8 \times \frac{16}{24.055} \times 4400 \times 60 / 454000 / 35.32$

lb/hr = 0.11

BHP = 2233

$9.8 \times \frac{16}{385.16}$ = lbs/scf $\times 60 \times 4400 \times 454 / 2233$

lb/BHp-hr = 0.02

072873 07/20/2011

SC

Hand Calculation Checks FOR RUN 1

% H_2O

$V_{m\,STD} = 43.126$

water vapor volume = 0.04706 x weight gain (3621.0-3461.0) = 160 g

$V_{wc} = 7.53$

$B_{ws} = 7.53 / (7.53 + 43.126) = 0.149$

% Moisture = $B_{ws} \times 100 = 14.9\%$

Velocity $V_s = 85.49 \times 0.84 \times \sqrt{\frac{\Delta P_{avg}}{(943+460)}} \times \sqrt{\frac{T_s+460}{(Sp/13.6+P_p)\times MW\,(30.3)}}$

$= 71.8 \times 1.73 \times \sqrt{\frac{1403}{(10.2/13.6+30.24)\times 30.3}}$

$= 124.2 \times \sqrt{\frac{1403}{30.99 \times 30.5}}$

$= 124.2 \times 1.26$ Stack dia. 16" CSA = 1.40

$= 156.5$ FT/sec ACFM = 156.5 x 60 x 1.40 = 13146 ACFM

$SCFM = ACFM \times \frac{(T_{STD})(P_s)}{(P_{STD}) \times (T_s+460)} = 13146 \times \frac{(528 \times 30.99)}{(29.92)\times(1403)} = \frac{16362.7}{41977.8}$

SCFM = 5124

dscfm = SCFM x (1-Bws) = 5124 (1-0.149) = 4360 dscfm

NOx ppmvd = 40.3 BHp = 2233

$40.3 \times \frac{46}{24.055} = Mg/m^3 \times 60 \times dscfm / 454000 / 35.32$ (dscfm = 4360)

lbs/hr = 1.26

$40.3 \times 1.194^{-7} = lb/scf \times 60 \times 4360 \times 454 / 2233 = lbs/BHp\text{-}hr = 0.26$

CO ppmvd = 638.3

$638.3 \times \left(\frac{28}{24.055}\right) \times 60 \times 4360 / 454000 / 35.32 =$

12.1 lbs/hr

$683.3 \times \frac{28}{385.1} \times 60 \times 4360 \times 454 / 2233 =$

2.6 g/BHp-hr

APPENDIX B

CALIBRATION DATA

ANALYZER RAW DATA

Client:	Waste Management	Location:	High Acres	Plant:	Engine Plant	Date:	7/14/2011
Project #:	72873	Operator:	SC	Source:	3520 #1	Time:	7:00 AM

Method / Gas	3A / O2		3A / CO2		10 / CO		7E / NOx	
Analyzer Info								
Make	Horiba		Horiba		TECO 48		TECO 42	
ID	BE06273		BE04978		BE04703		BE06266	
Span[1]	21.97		18.64		914.4		98.72	
Source	Engine #1		Engine #1		Engine #1		Engine #1	
[1] Highest Calibration Gas Used								
Calibration Gas Info								
Compostition	O2/CO2		O2/CO2		CO		NO	
Concentration	21.97 and 12.28		18.64 and 10.88		1016		493.6	
Bottlle ID	CC47086		CC47086		SG9108637		SG9148740	
	XC012756B		XC012756B					
		% Span		% Span		% Span		% Span
Zero		0.0%		0.0%		0.0%		0.0%
Mid		55.9%		58.4%		55.6%		50.0%
High		100.0%		100.0%		100.0%		100.0%
Analyzer Calibration	Response	Target	Response	Target	Response	Target	Response	Target
Zero	0.1	0	0.1	0	1	0	0.1	0
Mid	12.3	12.28	10.9	10.88	507	508	49.8	49.36
High	21.8	21.97	18.8	18.64	913.5	914.4	98.5	98.72
Probe Calibration	Response	Target	Response	Target	Response	Target	Response	Target
Zero	0.4	0.1	0.2	0.1	1.2	1	0.2	0.1
Mid	12.25	12.3	10.9	10.9	507.3	507	50	49.8
High								
Results	Cal. Error	Sys. Bias	Cal. Error	Sys. Bias	Cal. Error	Sys. Bias	Cal. Error	Sys. Bias
Zero	0.5%	1.4%	0.5%	0.5%	0.1%	0.0%	0.1%	0.1%
Mid	0.1%	-0.2%	0.1%	0.0%	-0.1%	0.0%	0.4%	0.2%
High	-0.8%		0.9%		-0.1%		-0.2%	

HYDROCARBON CALIBRATION SHEET
WASTE MANAGEMENT
HIGH ACRES LANDFILL
ENGINE 1
7/13/2011

NOTES				Calibration Target Criteria (% of span)	Actual Target % of Span	Actual Calibration Target ppm C3H8	THC Calibration response, ppm C3H8					CE must be 5% cal gas	Drift Determination Criteria No greater than 3% of span		
							actual conc	System Injection				% of cal. gas			
								Pretest 7:25	PostT 1 9:45	PostT 2 11:28	PostT 3 13:14		Test 1	Test 2	Test 3
Stack ID	Engine 1	Resp Time 1	90			0		0.8	2	2	3		0.12	0.12	0.22
Span	1000	Resp Time 2	90	25-35%	27.1%	270.5		271				0.2%			
Analyzer ID	BE05001	Resp Time 3	90	45-55%	54.1%	541		535	538	535.5	508	-1.1%	0.30	0.05	-2.70
Calibration Gas Value	901.7	Cylinder ID	CC27424	80-90%	90.2%	901.7		906				0.5%			

NOTES				Calibration Target Criteria (% of span)	Actual Target % of Span	Actual Calibration Target ppm CH4	Methane Calibration response, ppm CH4					CE must be 5% cal gas	Drift Determination Criteria No greater than 3% of span		
							actual conc	System Injection				% of cal. gas			
								Pretest 7:25	PostT 1 9:45	PostT 2 11:28	PostT 3 13:14		Test 1	Test 2	Test 3
Stack ID	Engine 1	Resp Time 1	90			0		2	3	4	4		0.05	0.10	0.10
Span	2000	Resp Time 2	90	25-35%	31.4%	628.5		655				4.2%			
Analyzer ID	BE05001	Resp Time 3	90	45-55%	52.4%	1047.5		1045	1041	1045	1051	-0.2%	-0.20	0.00	0.30
Calibration Gas Value	2095	Cylinder ID	XC016325B	80-90%	94.3%	1885.5		1885				0.0%			

Methane	1885	1045	655
Propane	795	442	289
Response Factor	2.37	2.36	2.27
			2.33

CONESTOGA-ROVERS & ASSOCIATES

RESPONSE TIME

Client:	Waste Management	Plant:	Engine Plant	Location:	High Acres
Project #:	72873	Source:	3520 #1	Date:	7/13/2011
Operator:	SC	Method/Gas:	Multiple	Time:	1:50 PM

	Upscale Response (sec.)				Downscale Response (sec.)				Response
Analyzer (ID)	1	2	3	Average	1	2	3	Average	Time[1]
BE06273	45	45	45	45.00	45	45	45	45.00	45.00
BE04978	45	45	45	45.00	45	45	45	45.00	45.00
BE04703	60	60	60	60.00	60	60	60	60.00	60.00
BE06266	60	60	60	60.00	60	60	60	60.00	60.00
								System Response Time[2]:	60.00

Notes:
1 Greater value of average upscale response and average downscale response.
2 Maximum value of all analyzer response times.

CONESTOGA-ROVERS & ASSOCIATES

DILUTION CHECK

Client:	Waste Management	Plant:	Engine Plant	Location:	High Acres
Project #:	72873	Source:	3520 #1	Date:	07/13/11
Operator:	SC	Method/Gas:	3A / CO2	Time:	12:00 PM

Span Value 21.97 Gas Concentration 21.97 - 12.28 Analyzer ID 4976

Cal Gas	Divider Setting (%)	% Span	Analyzer Response	Target	Calibration Error
Zero		0%	0.1	0	0.46%
Mid*		56%	12.3	12.28	0.09%
High**		100%	21.8	21.97	-0.77%

Note:
*Mid Gas must be 40% to 60% of span
**High Gas must be 80% to 100% of span

Gas Concentration 21.97 Gas Composition O2/N2

Dilution (%)	Target	Trial #1	Trial #2	Trial #3	Avg. Resp.	% Accuracy*
0	0.00					
10	2.20	2.15	2.2	2.2	2.18	-0.62%
20	4.39	4.4	4.4	4.4	4.40	0.14%
30	6.59					
40	8.79	8.9	8.9	8.9	8.90	1.27%
50	10.99	11.1	11.2	11	11.10	1.05%
60	13.18	13.3	13.2	13.3	13.25	0.52%
70	15.38					
80	17.58					
90	19.77	20	20	20	20.00	1.15%

$$\text{Accuracy} = \frac{\text{Average Response - Target}}{\text{Target}} \times 100$$

*Note: Accuracy must be within ± 2% at all dilution levels

System Check

Target	Resp. 1	Resp. 2	Resp. 3	Avg. Resp.	% Accuracy*
12.28	12.3	12.3	12.3	12.30	0.16%
Cylinder ID#	XC012756B				

*Note: Accuracy must be within ± 2% at all dilution levels

HIGH ACRES LANDFILL
STRATIFICATION TEST
O2

Point 1	7/13/2011 14:42	8.34544		
	7/13/2011 14:42	8.24167		
	7/13/2011 14:43	8.24167		
	7/13/2011 14:43	8.24167		
	7/13/2011 14:44	8.24167		
	7/13/2011 14:44	8.34544		
	7/13/2011 14:45	8.34544		
	7/13/2011 14:45	8.34544		
	7/13/2011 14:46	8.24472		
	7/13/2011 14:46	8.24472		
	7/13/2011 14:47	8.24472		
	7/13/2011 14:47	8.35154		
	7/13/2011 14:48	8.35154	8.291206	
	7/13/2011 14:48	8.35154		
	7/13/2011 14:49	8.35154		
	7/13/2011 14:49	8.25082		
	7/13/2011 14:50	8.25082		
	7/13/2011 14:50	8.25082		
	7/13/2011 14:51	8.35154		
	7/13/2011 14:51	8.35154		
	7/13/2011 14:52	8.45532		
	7/13/2011 14:52	8.45532		
Point 2	7/13/2011 14:53	8.35154		
	7/13/2011 14:53	8.25082		
	7/13/2011 14:54	8.3546		
	7/13/2011 14:54	8.25388		
	7/13/2011 14:55	8.25388		
	7/13/2011 14:55	8.25388		
	7/13/2011 14:56	8.3546		
	7/13/2011 14:56	8.3546		
	7/13/2011 14:57	8.3546		
	7/13/2011 14:57	8.3546		
	7/13/2011 14:58	8.3546		
	7/13/2011 14:58	8.3546	8.320517	8.331233
	7/13/2011 14:59	8.3546		
	7/13/2011 14:59	8.3546		
	7/13/2011 15:00	8.3546		
	7/13/2011 15:00	8.3546		
	7/13/2011 15:01	8.3546		
	7/13/2011 15:01	8.3546		
	7/13/2011 15:02	8.3546		
	7/13/2011 15:02	8.3546		
	7/13/2011 15:03	8.3546		
	7/13/2011 15:03	8.3546		
	7/13/2011 15:04	8.3546		
	7/13/2011 15:04	8.3546		
Point 3	7/13/2011 15:05	8.3546		
	7/13/2011 15:05	8.3546		
	7/13/2011 15:06	8.3546		
	7/13/2011 15:06	8.3546		
	7/13/2011 15:07	8.3546		
	7/13/2011 15:07	8.3546		
	7/13/2011 15:08	8.3546		
	7/13/2011 15:08	8.3546		
	7/13/2011 15:09	8.3546		
	7/13/2011 15:09	8.3546		
	7/13/2011 15:10	8.3546		
	7/13/2011 15:10	8.3546	8.3546	

HIGH ACRES LANDFILL
Engine Number 1 Emissions Testing
July 13, 2011
NOx Converter Efficiency Test

Date	NO2 gas	NOx Response	Converter Efficiency	Result	Comments
07/13/11	49.68	46.6	93.8%	PASS	Pre-test

AirGas Cylinder ID: SG9153361BAL

Airgas

R9056

Airgas Speciality Gases
12722 S. Wentworth Avenue
Chicago, IL 60628
1-773-785-3000
FAX: 1-773-785-1928
www.airgas.com

CERTIFICATE OF ANALYSIS
Grade of Product: EPA Protocol

Part Number:	E02AI99E15A52T7	Reference Number:	54-124185240-5
Cylinder Number:	XC016325B	Cylinder Volume:	142 Cu.Ft.
Laboratory:	ASG - Chicago - IL	Cylinder Pressure:	1975 PSIG
Analysis Date:	Jul 20, 2009	Valve Outlet:	590

Expiration Date: Jul 20, 2012

Certification performed in accordance with "EPA Traceability Protocol (Sept. 1997)" using the assay procedures listed. Analytical Methodology does not require correction for analytical interferences. This cylinder has a total analytical uncertainty as stated below with a confidence level of 95%. There are no significant impurities which affect the use of this calibration mixture. All concentrations are on a volume/volume basis unless otherwise noted.
Do Not Use This Cylinder below 150 psig.i.e. 1 Mega Pascal

ANALYTICAL RESULTS

Component	Requested Concentration	Actual Concentration	Protocol Method	Total Relative Uncertainty
METHANE	2100 PPM	2095 PPM	G2	+/- 1% NIST Traceable
Air	Balance			

CALIBRATION STANDARDS

Type	Lot ID	Cylinder No	Concentration	Expiration Date
NTRM/CH4	20506	SG9112904BAL	495.1PPM METHANE/	Jul 01, 2011

ANALYTICAL EQUIPMENT

Instrument/Make/Model	Analytical Principle	Last Multipoint Calibration
VARIAN CP3800	FID	Jul 02, 2009

Triad Data Available Upon Request

Notes:

QA Approval

Airgas

CERTIFICATE OF ANALYSIS
Grade of Product: EPA Protocol

Airgas Specialty Gases
600 Union Landing Road
Riverton, NJ 08077
(856) 829-7878
Fax (856) 829-0571
www.airgas.com

Part Number:	E02AI99E15A0563	Reference Number:	82-124213359-1
Cylinder Number:	CC27424	Cylinder Volume:	146 Cu.Ft.
Laboratory:	ASG - Riverton - NJ	Cylinder Pressure:	2015 PSIG
Analysis Date:	Mar 29, 2010	Valve Outlet:	590

Expiration Date: Mar 29, 2013

Certification performed in accordance with "EPA Traceability Protocol (Sept. 1997)" using the assay procedures listed. Analytical Methodology does not require correction for analytical interferences. This cylinder has a total analytical uncertainty as stated below with a confidence level of 95%. There are no significant impurities which affect the use of this calibration mixture. All concentrations are on a volume/volume basis unless otherwise noted.
Do Not Use This Cylinder below 150 psig.i.e. 1 Mega Pascal

ANALYTICAL RESULTS

Component	Requested Concentration	Actual Concentration	Protocol Method	Total Relative Uncertainty
PROPANE	900.0 PPM	901.7 PPM	G1	+/- 1% NIST Traceable
Air	Balance			

CALIBRATION STANDARDS

Type	Lot ID	Cylinder No	Concentration	Expiration Date
NTRM	01050613	SG9112817BAL	965.6PPM PROPANE/NITROGEN	May 15, 2012

ANALYTICAL EQUIPMENT

Instrument/Make/Model	Analytical Principle	Last Multipoint Calibration
Nicolet 470 AEP0000416 C3H8	FTIR	Mar 11, 2010

Triad Data Available Upon Request

Notes:

Approved for Release

#5000

Airgas

CERTIFICATE OF ANALYSIS
Grade of Product: EPA Protocol

Airgas Specialty Gases
600 Union Landing Road
Riverton, NJ 08077
(856) 829-7878
Fax (856) 829-0571
www.airgas.com

Part Number:	E02NI99E15A0919	Reference Number:	82-124257054-1
Cylinder Number:	SG9148740	Cylinder Volume:	144 Cu.Ft.
Laboratory:	ASG - Riverton - NJ	Cylinder Pressure:	2015 PSIG
Analysis Date:	Mar 22, 2011	Valve Outlet:	660

Expiration Date: Mar 22, 2013

Certification performed in accordance with "EPA Traceability Protocol (Sept. 1997)" using the assay procedures listed. Analytical Methodology does not require correction for analytical interferences. This cylinder has a total analytical uncertainty as stated below with a confidence level of 95%. There are no significant impurities which affect the use of this calibration mixture. All concentrations are on a volume/volume basis unless otherwise noted.
Do Not Use This Cylinder below 150 psig.i.e. 1 Mega Pascal

ANALYTICAL RESULTS

Component	Requested Concentration	Actual Concentration	Protocol Method	Total Relative Uncertainty
NITRIC OXIDE	500.0 PPM	493.6 PPM	G1	+/- 1% NIST Traceable
NITROGEN	Balance			
Total oxides of nitrogen		494.5 PPM		For Reference Only

CALIBRATION STANDARDS

Type	Lot ID	Cylinder No	Concentration	Expiration Date
NTRM	10060424	CC269138	495.6PPM NITRIC OXIDE/NITROGEN	Feb 01, 2016

ANALYTICAL EQUIPMENT

Instrument/Make/Model	Analytical Principle	Last Multipoint Calibration
Nicolet 470 AEP0000416 NO	FTIR	Mar 15, 2011

Triad Data Available Upon Request

Notes:

Approved for Release

#5000

Airgas

CERTIFICATE OF ANALYSIS
Grade of Product: EPA Protocol

Airgas Specialty Gases
600 Union Landing Road
Riverton, NJ 08077
(856) 829-7878
Fax (856) 829-0571
www.airgas.com

Part Number:	E02NI99E15A0101	Reference Number:	82-124198364-1
Cylinder Number:	SG9108637	Cylinder Volume:	144 Cu.Ft.
Laboratory:	ASG - Riverton - NJ	Cylinder Pressure:	2015 PSIG
Analysis Date:	Nov 23, 2009	Valve Outlet:	350

Expiration Date: Nov 23, 2012

Certification performed in accordance with "EPA Traceability Protocol (Sept. 1997)" using the assay procedures listed. Analytical Methodology does not require correction for analytical interferences. This cylinder has a total analytical uncertainty as stated below with a confidence level of 95%. There are no significant impurities which affect the use of this calibration mixture. All concentrations are on a volume/volume basis unless otherwise noted.
Do Not Use This Cylinder below 150 psig.i.e. 1 Mega Pascal

ANALYTICAL RESULTS

Component	Requested Concentration	Actual Concentration	Protocol Method	Total Relative Uncertainty
CARBON MONOXIDE	1000 PPM	1016 PPM	G1	+/- 1% NIST Traceable
NITROGEN	Balance			

CALIBRATION STANDARDS

Type	Lot ID	Cylinder No	Concentration	Expiration Date
NTRM	08060422	CC255418	1002.4PPM CARBON MONOXIDE/NITROGEN	Apr 15, 2012

ANALYTICAL EQUIPMENT

Instrument/Make/Model	Analytical Principle	Last Multipoint Calibration
Siemens 6E Ultramat L9-0191	NDIR	Nov 09, 2009

Triad Data Available Upon Request

Notes:

QA Approval

#5000

Airgas

CERTIFICATE OF ANALYSIS
Grade of Product: EPA Protocol

Airgas Specialty Gases
600 Union Landing Road
Riverton, NJ 08077
(856) 829-7878
Fax (856) 829-0571
www.airgas.com

Part Number:	E03NI59E15A3452	Reference Number:	82-124236643-1
Cylinder Number:	CC47086	Cylinder Volume:	159 Cu.Ft.
Laboratory:	ASG - Riverton - NJ	Cylinder Pressure:	2015 PSIG
Analysis Date:	Oct 05, 2010	Valve Outlet:	590

Expiration Date: Oct 05, 2013

Certification performed in accordance with "EPA Traceability Protocol (Sept. 1997)" using the assay procedures listed. Analytical Methodology does not require correction for analytical interferences. This cylinder has a total analytical uncertainty as stated below with a confidence level of 95%. There are no significant impurities which affect the use of this calibration mixture. All concentrations are on a volume/volume basis unless otherwise noted.
Do Not Use This Cylinder below 150 psig.i.e. 1 Mega Pascal

ANALYTICAL RESULTS

Component	Requested Concentration	Actual Concentration	Protocol Method	Total Relative Uncertainty
CARBON DIOXIDE	19.00 %	18.64 %	G1	+/- 1% NIST Traceable
OXYGEN	22.00 %	21.97 %	G1	+/- 1% NIST Traceable
NITROGEN	Balance			

CALIBRATION STANDARDS

Type	Lot ID	Cylinder No	Concentration	Expiration Date
NTRM	08061332	CC255676	20.09% CARBON DIOXIDE/NITROGEN	Jul 15, 2012
NTRM	09061423	CC273746	22.53% OXYGEN/NITROGEN	Aug 01, 2013

ANALYTICAL EQUIPMENT

Instrument/Make/Model	Analytical Principle	Last Multipoint Calibration
Horiba VIA 510 LDH9LRNS	NDIR	Sep 25, 2010
Siemens 5E BN805	Paramagnetic	Sep 25, 2010

Triad Data Available Upon Request

Notes:

Approved for Release

#5000

Airgas

CERTIFICATE OF ANALYSIS
Grade of Product: EPA Protocol

Airgas Specialty Gases
600 Union Landing Road
Riverton, NJ 08077
(856) 829-7878
Fax (856) 829-0571
www.airgas.com

Part Number:	E03NI78E15A1066	Reference Number:	82-124213435-1
Cylinder Number:	XC012756B	Cylinder Volume:	151 Cu.Ft.
Laboratory:	ASG - Riverton - NJ	Cylinder Pressure:	2015 PSIG
Analysis Date:	Mar 26, 2010	Valve Outlet:	590

Expiration Date: Mar 26, 2013

Certification performed in accordance with "EPA Traceability Protocol (Sept. 1997)" using the assay procedures listed. Analytical Methodology does not require correction for analytical interferences. This cylinder has a total analytical uncertainty as stated below with a confidence level of 95%. There are no significant impurities which affect the use of this calibration mixture. All concentrations are on a volume/volume basis unless otherwise noted.
Do Not Use This Cylinder below 150 psig.i.e. 1 Mega Pascal

ANALYTICAL RESULTS

Component	Requested Concentration	Actual Concentration	Protocol Method	Total Relative Uncertainty
CARBON DIOXIDE	10.00 %	9.887 %	G1	+/- 1% NIST Traceable
OXYGEN	12.00 %	12.28 %	G1	+/- 1% NIST Traceable
NITROGEN	Balance			

CALIBRATION STANDARDS

Type	Lot ID	Cylinder No	Concentration	Expiration Date
NTRMplus	06120412	CC184945	19.66% CARBON DIOXIDE/NITROGEN	May 01, 2010
NTRM	98051003	SG9161097BAL	12.05% OXYGEN/NITROGEN	Jan 15, 2012

ANALYTICAL EQUIPMENT

Instrument/Make/Model	Analytical Principle	Last Multipoint Calibration
Siemens Ultramat 6E N1-N0-0820	NDIR	Mar 25, 2010
Siemens 5E BN805	Paramagnetic	Mar 02, 2010

Triad Data Available Upon Request

Notes:

Approved for Release

#5000

Airgas

CERTIFICATE OF ANALYSIS
Grade of Product: EPA Protocol

Airgas Specialty Gases
12722 South Wentworth Avenue
Chicago, IL, 60628
773-785-3000 Fax: 773-785-1928
http://www.airgas.com

Part Number:	E02NI99E15A0055	Reference Number:	54-124268377-1
Cylinder Number:	SG9153361BAL	Cylinder Volume:	144 Cu.Ft.
Laboratory:	ASG - Chicago - IL	Cylinder Pressure:	2015 PSIG
PGVP Number:	B12011	Valve Outlet:	660
Analysis Date:	May 31, 2011		

Expiration Date: Nov 30, 2011

Certification performed in accordance with "EPA Traceability Protocol (Sept. 1997)" using the assay procedures listed. Analytical Methodology does not require correction for analytical interferences. This cylinder has a total analytical uncertainty as stated below with a confidence level of 95%. There are no significant impurities which affect the use of this calibration mixture. All concentrations are on a volume/volume basis unless otherwise noted.
Do Not Use This Cylinder below 150 psig.i.e. 1 Mega Pascal

ANALYTICAL RESULTS

Component	Requested Concentration	Actual Concentration	Protocol Method	Total Relative Uncertainty
NITROGEN DIOXIDE	50.00 PPM	49.68 PPM	G1	+/- 1% NIST Traceable
NITROGEN	Balance			

CALIBRATION STANDARDS

Type	Lot ID	Cylinder No	Concentration	Expiration Date
GMIS/NO2	124188456101	SG9132955BAL	60.67PPM NITROGEN DIOXIDE/NITROGEN	Aug 30, 2012

ANALYTICAL EQUIPMENT

Instrument/Make/Model	Analytical Principle	Last Multipoint Calibration
(FTIR-2)Nicolet Magna	FTIR	May 26, 2011

Triad Data Available Upon Request

Permanent Notes:OXYGEN ADDED TO MAINTAIN STABILITY

Notes:

Approved for Release

CONESTOGA-ROVERS & ASSOCIATES

Method 5 Dry Gas Meter Annual Calibration

Meter Box ID: BE04908

Barometric Pressure, P_b, in. Hg: 30.15

Calibration Date: 04/14/11

Reference Meter ID: BE04899

Reference Meter posted Y: 0.995

Parameter	Units	Run 1	Run 2	Run 3	Average
Orfice Manometer Setting, ΔH	in. H_2O	0.50	1.50	3.00	
Elapsed Time	min.	13.0	8.0	6.0	
Reference Meter					
Initial Volume	ft^3	379.255	384.754	390.482	
Final Volume	ft^3	384.578	390.280	396.347	
Total Gas Volume, Vw	ft^3	5.2964	5.4984	5.8357	5.5435
Initial Temperature	F	67.00	67.00	67.00	
Final Temperature	F	67.00	67.00	67.00	
Average Temperature, Tw	F	67.00	67.00	67.00	67.00
Dry Gas Meter					
Initial Volume	ft^3	621.924	627.465	633.220	
Final Volume	ft^3	627.390	633.026	639.090	
Total Gas Volume, Vm	ft^3	5.4660	5.5610	5.8700	5.6323
Initial Temperature Inlet	F	66.00	67.00	71.00	
Final Temperature Inlet	F	68.00	72.00	75.00	
Initial Temperature Outlet	F	65.00	65.00	66.00	
Final Temperature Outlet	F	65.00	66.00	67.00	
Average Temperature, Tm	F	66.00	67.50	69.75	67.75
Results		**Be sure to post ΔH @ and Y on the meter box.**			
ΔH @	in. H_2O	1.6723	1.7578	1.7481	**1.7261**
ΔH @ within 0.20 of average?	Yes/No	YES	YES	YES	
Gamma, Y	unitless	0.9660	0.9861	0.9921	**0.9814**
Y for each run within 0.02 of average?	Yes/No	YES	YES	YES	

Calibrated by: _____ Calibration Reviewed by: _____

$$Y = \frac{V_w P_b (T_m + 460)}{V_m \left(P_b + \frac{\Delta H}{13.6}\right)(T_w + 460)}$$

$$\Delta H @ = \frac{0.0317 \times \Delta H}{P_b \times (T_m + 460)} \times \left[\frac{(T_w + 460) \times \Theta}{V_w}\right]^2$$

Reference: 40 CFR 60, Appendix A Reference Method 5 Section 10.3.1

Printed: 4/15/2011

CONESTOGA-ROVERS & ASSOCIATES

Method 5 Dry Gas Meter Post Test Calibration Report

Meter Box ID:	BE04908	Project Number:	072873-00
Barometric Pressure, P_b, in. Hg:	29.91	Project Name:	W.M. High Acres
Reference Meter posted Y:	0.995	Test Date:	07/14/11
Maximum Vacuum, in. H2O:	2.0	Check Date:	07/18/11
Y posted on Meter Box:	0.9814	Reference Meter ID:	BE04899

Parameter	Units	Run 1	Run 2	Run 3	Average
Orfice Manometer Setting, ΔH	in. H_2O	1.73	1.73	1.73	1.73
Elapsed Time	min.	10.0	10.0	10.0	10.0
Meter Vacuum	in. H_2O	2.0	2.0	2.0	2.0
Reference Meter					
Initial Volume	ft^3	827.572	835.095	842.574	
Final Volume	ft^3	835.095	842.574	850.062	
Total Gas Volume, Vw	ft^3	7.4854	7.4416	7.4506	7.4592
Initial Temperature	F	83.00	83.00	83.00	
Final Temperature	F	83.00	83.00	83.00	
Average Temperature, Tw	F	83.00	83.00	83.00	83.00
Dry Gas Meter					
Initial Volume	ft^3	794.575	802.051	809.585	
Final Volume	ft^3	802.051	809.585	817.154	
Total Gas Volume, Vm	ft^3	7.4760	7.5340	7.5690	7.5263
Initial Temperature Inlet	F	83.00	85.00	89.00	
Final Temperature Inlet	F	85.00	89.00	91.00	
Initial Temperature Outlet	F	83.00	83.00	84.00	
Final Temperature Outlet	F	83.00	84.00	85.00	
Average Temperature, Tm	F	83.50	85.25	87.25	85.33
Results					
Gamma, Y	unitless	0.9979	0.9876	0.9879	**0.9911**

Average Y within 5% of posted Y? YES/NO YES

Calibration Check by: S. Zimmerman Calibration Check Reviewed by: Steve Carter

$$Y = \frac{V_w P_b (T_m + 460)}{V_m \left(P_b + \frac{\Delta H}{13.6}\right)(T_w + 460)}$$

CONESTOGA-ROVERS & ASSOCIATES

Method 5 Meter Box Post Test
Preventative Maintenance Checklist

Meter Box ID: BE04908
Check Date: 07/18/11

Equipment Check

Check that each of the following were done.

- [x] 1. Manometer and Pump Oil fluid levels have been checked and filled as necessary. Meter Box and pump contain bottles of spare fluids.
- [x] 2. The overflow jars in the pump and meter box have been emptied and cleaned. The foam pads within the jars have been cleaned or replaced.
- [x] 3. The meter box and pump have been checked for missing knobs, screws and latches. Any missing have been replaced.
- [x] 4. Meter box and pump have been leak checked and repaired as necessary.
- [x] 5. Meter box timer and switch have been checked for defects.
- [x] 6. Meter box heat controllers and amphenol connector have been tested/repaired.
- [x] 7. Temperature display checked against Cal-Pal.

Temperature Display Check	
Cal-Pal Reading	Display Reading
0	0
500	498
1000	1000

- [x] 8. Meter box and pump clean inside and out.
- [x] 9. Meter box contains current nozzle inventory and annual calibration sheets.

Maintenance performed by: S. Zimmerman

**** **Place completed form in calibrations section of ISO folder****

CONESTOGA-ROVERS & ASSOCIATES

Barometer Calibration Report

Project Number:	072873-00			
Project Name:	W.M. High Acres			
Test Date:	07/14/11			
Barometer ID:	BE04199			
	Pre. Cal		**Post Cal**	
Calibrator's Initials:	S.Z.		S.Z.	
Calibration Date:	07/07/11		07/18/11	
Time:	9:10		9:42	
Barometric Pressure:	30.00	**in. Hg**	29.94	**in. Hg**
NWS Station Pressure:	30.00	**in. Hg**	29.97	**in. Hg**
Pass/Fail, (within 0.1 in. Hg):	**Pass**		**Pass**	

Elevation at CRA Niagara Falls office 582' **Elevation at National Weather Service 591'**

Barometer pressure correction due to altitude is not necessary due to the fact that the elevations are similar.

CONESTOGA-ROVERS & ASSOCIATES

Revision- 00
March 2004

Method 2 Calibration Report
(Thermocouples, Pitots and Pitot Assemblies)

Calibration Date: 07/18/11
Calibrator's Initials: S.Z.

Project Number: 072873_00
Project Name: W.M. High Acres

Equipment ID																							
Ass.	Pitot	Tc	a1 (°)	a2 (°)	b1 (°)	b2 (°)	Dt (in.)	PA (in.)	PB (in.)	w (in.)	Z (in.)	Field Tc Temp (F)	Cal. Tc Temp (F)	Field Tc Temp (R)	Cal. Tc Temp (R)	Pitot Pass/Fail	W (in.)	X (in.)	Y (in.)	Pitot Ass. Pass/Fail	W (in.)	Pitot Ass w/ st therm Pass/Fail
BE04193A	3P-1	3T-1	1.5	1.0	2.0	2.0	0.250	0.264	0.264	0.003	0.039	83	82	543	542	Pass					2.00	Pass

Acceptance Criteria

Pitots			Pitot Assemblies			Thermocouples
a1	< +10°	PA = PB	a1	< +10°	X	Thermocouples are calibrated at absolute stack temperature and the calibration is valid if the field thermocouple and the calibrated thermocouple read temperatures to within 1.5% of each other.
a2	< +10°	Dt: between 3/16 and 3/8 in.	a2	< +10°	Y	
b1	< +5°	P: 1.05Dt < P < 1.50Dt	b1	< +5°	Dt:	
b2	< +5°		b2	< +5°	W	
Z	< 1/8 in.		Z	< 1/8 in.		
w	< 0.03125 in		w	< 0.03125 ir	P:	

APPENDIX C

ENGINE OPERATING DATA

NOX C.O WM

	TIME	ENG HOURS	FGC INLET TEMP	FGC INLET PRESS	FGC DISC. TEMP	FGC DISC. PRESS	FGC OIL TEMP	FGC OIL PRESS	COOL INLET TEMP	COOL DISC. TEMP	FINAL DISC. TEMP	INST AIR PRESS	FGC OIL LEVEL	~~COMP INLET VAC~~	~~FIRE SYSTEM PSI/VOL~~	ENGINE RADIATOR PRESSURE - LEVELS #1 #2 #3 #4	CRANKCASE BREATHER OPACITY
1																	
2																	
3																	
4	1010	1194.48	105	-3.5	210	7.8			178	94	121			49	657	43594	
5	1020	1194.57	105	-3.5	208	7.7			177	94	121			52	641	43595	
6	1035	1195.14	105	-3.5	210	7.7			177	95	121			53	640	43595	
7	1050	1195.28	105	-3.5	208	7.6			177	94	121			51	640	43595	
8	1108	1195.47	105	-3.5	209	7.7			178	95	122			54	638	43596	
9	1121	1196.00	106	-3.5	210	7.6			178	95	122			55	629	43596	
10																	
11																	
12	1205	1196.43	105	-3.5	210	7.6			178	96	123			52	616	43597	
13	1224	1197.02	105	-3.5	208	7.8			179	96	123			54	626	43598	
14	1235	1197.28	105	-3.5	209	7.7			179	96	123			55	617	43599	
15	1250	1197.28	105	-3.5	208	7.8			180	97	124			57	628	43599	
16	1307	1197.44	105	-3.5	209	7.8			180	97	124			52	631	43599	
17																	
18																	
19																	
20																	
21																	
22																	
23																	
24																	
25																	
26																	
27																	
28																	
29																	
30																	
31																	

CONESTOGA-ROVERS & ASSOCIATES

Compare DATA FROM Hand Held TO RM

PROJECT No.: 072873

PROJECT NAME: High Acres

DESIGNED BY:

DATE: 08/04/2011

CHECKED BY:

PAGE ____ OF ____

RUN 1 -

08:32 - 09:32 - NO DATA From hand held

RUN 2 -

10:20 - 11:20

-	NOx	CO
hand held	52.3	640.8
Rm	40.9	632.1

RUN 3

12:05 - 13:05

hand held	54.0	623.6
Rm	42.1	626.6

APPENDIX D

APPROVAL LETTER

New York State Department of Environmental Conservation
Division of Air Resources, Region 8
6274 East Avon-Lima Road, Avon, New York 14414-9516
Phone: (585) 226-2466 • **Fax:** (585) 226-2909
Website: www.dec.ny.gov

Joe Martens
Commissioner

July 12, 2011

Mr. Steven D. Wilsey
Conestoga-Rovers & Associates
2055 Niagara Falls Blvd., Suite #3
Niagara Falls, NY 14304

RE: High Acres Landfill
Engine #1 Test Protocol
TV Permit 8-9908-00162/00043

Dear Mr. Wilsey:

The Department has reviewed and approved the source emission test protocol dated June 20, 2011 for the CAT G3520 internal combustion (IC) engine #1 at the High Acres Landfill and Recycling Center (HALRC) located in Fairport, NY.

According the protocol, the facility will be testing the CAT G3520 IC engine for oxides of nitrogen (NO_x), carbon monoxide (CO) and volatile organic compounds (VOCs) in order to demonstrate compliance with the emission standards listed under 40CFR60 Subpart JJJJ. The Department requires a comparison of the emission factors obtained from the emission test for NO_x, CO, and VOCs with the manufacturer's specifications to be included in the final report. This is for informational purposes.

The Department will also require the facility to monitor the treatment system parameters every 15 minutes during each one hour test run to confirm proper operation of the treatment system. Operation of the treatment system is standard operating procedure when landfill gas is the fuel for the IC engine.

The Department will also require that instantaneous NO_x, CO and VOC emission monitoring to be completed every 15 minutes during each one hour run. The facility should use the monitoring device that is typically used for the quarterly instantaneous monitoring. The results should be included in the test report.

To allow the Department sufficient time to schedule a witness to the test, please inform me of any changes to the anticipated date of July 14, 2011. If you have any questions or would like to discuss any issues related to the compliance test, please call me at (585)226-5312. Thank you.

Sincerely,

Michele A Kharroubi

Michele A. Kharroubi, P.E.
Environmental Engineer II
Division of Air Resources

cc: V. Saufley - Waste Management Renewable Energy LLC
R. Zayatz - WMNY/Model City, NY
S. DiSalvo – WMNY/Bergen, NY
J. Richardson – WMNY/Fairport, NY