# PERFORMANCE TESTING
# March 2009

**As Defined By The**
**Title 40 Code of Federal Regulations Part 60 – Massachusetts State Operating Permit**

**RMCEINC Project #2009-15096**

**RESOURCE CONTROL, INC.**
**(a subsidiary of Waste Management of Massachusetts)**
**FITCHBURG/WESTMINSTER SANITARY LANDFILL**
**LANDFILL GAS-TO-ENERGY FACILITY**
**WESTMINSTER, MASSACHUSETTS**

**PERMIT NUMBER: DEP Transmittal# X224236**
**LANDFILL GAS ENGINE #3 (EU03)**

**PREPARED FOR:**
**RESOURCE CONTROL, INC.**
**c/o WASTE MANAGEMENT OF MASSACHUSETTS (WMMA)**
**Waste Management Renewable Energy**

**BY:**

**RMC ENVIRONMENTAL, INC. – CHICAGO REGIONAL OFFICE**

## REPORT CERTIFICATION

The sampling, analysis, and data collection performed for this report were carried out under my direction and supervision, and I hereby certify that the test report is authentic and accurate, to the best of my knowledge.

Date 4/15/09

Signature

Rachel Chleborowicz, QSTI
Project Manager
RMC ENVIRONMENTAL, INC.

## TABLE OF CONTENTS

**1.0 PROJECT INFORMATION** ..... 1

1.1 COMPANY INFORMATION ..... 1
1.2 TESTING FIRM INFORMATION ..... 1
1.3 TEST INFORMATION ..... 1

**2.0 SOURCE IDENTIFICATION** ..... 1

**3.0 SUMMARY AND DISCUSSION OF RESULTS** ..... 2

**4.0 POLLUTANTS AND TEST METHODS** ..... 2

**5.0 TEST PROCEDURES AND RESULTS** ..... 3

5.10 SAMPLING PROCEDURES ..... 3
5.11 VOLUMETRIC FLOW RATES ..... 3
5.12 INSTRUMENTAL TEST EQUIPMENT AND PROCEDURES ..... 5
5.13 INSTRUMENTAL ANALYTICAL DATA ..... 6

**6.0 EQUIPMENT CALIBRATION AND QUALITY ASSURANCE** ..... 6

**APPENDIX A. TEST SUMMARY SHEETS** ..... A

***Emissions Summary*** ..... *A*

**APPENDIX B. FIELD TEST DATA W/ INSTRUMENTAL TEST DATA** ..... B

***Method 1-4 Field Data*** ..... *B*
***Flow Rate Determinations*** ..... *B*
***Calibration Summaries*** ..... *B*
***Instrumental Test Run Data*** ..... *B*

**APPENDIX C. TEST QA/ QC FORMS** ..... C

***Calibration Gas Certificates of Analysis*** ..... *C*
***Meterbox Calibrations*** ..... *C*

**APPENDIX D. PROCESS DATA** ..... D

## 1.0 PROJECT INFORMATION

### 1.1 Company Information

| | |
|---|---|
| Name and Address: | Resource Control, Inc.<br>Fitchburg/Westminster Sanitary Landfill<br>Landfill Gas-to-Energy Facility<br>101 Fitchburg Road – State Route 31<br>Westminster, Massachusetts 01473 |
| Contact: | Robert Magnusson |
| Telephone Number: | 603-929-5435 |
| Permit Number: | DEP Transmittal# X224236 |
| Source Tested: | One IC Engine (EU03) – Landfill Gas Treatment / Electric Generating Plant |

### 1.2 Testing Firm Information

| | |
|---|---|
| Name and Address: | RMC ENVIRONMENTAL, INC.<br>9226 North 2nd Street<br>Machesney Park, Illinois 61115 |
| Contact: | Rachel Chleborowicz |
| Telephone Number: | 815-378-6150 Mobile 815-425-1102 Fax<br>RMCE@AirMonitoring.com / RMCEInc@aol.com |

### 1.3 Test Information

| | | |
|---|---|---|
| Test Requested By: | Resource Control, Inc. c/o Waste Management of Massachusetts | |
| Source Contact: | Robert Magnusson | |
| Telephone Number: | 603-929-5435 | |
| Test Objective: | IC Engine Performance Testing | |
| Test Methods: | EPA Methods 1-4, 3A, 7E, 10 and 25A/18 | |
| Test Dates: | March 18, 2009 | |
| Agency Personnel: | Gary Roscoe | Massachusetts DEP |
| Source Test Coordinators: | Eric Hermanson<br>Robert Magnusson | Plant Manager, WMMA<br>Market Area Engineer, WMMA |
| Test Personnel: | Rachel Chleborowicz<br>Greg Chleborowicz | Sr. Project Manager, RMCEInc<br>Project Manager, RMCEInc |
| Laboratory Analysis: | Core Laboratories - Houston | |

## 2.0 SOURCE IDENTIFICATION

| | |
|---|---|
| Name and Address: | Resource Control, Inc. c/o Waste Management of Massachusetts<br>Fitchburg/Westminster Sanitary Landfill<br>Landfill Gas-to-Energy Facility<br>101 Fitchburg Road – State Route 31<br>Westminster, Massachusetts 01473 |

| | |
|---|---|
| Contact: | Robert Magnusson |
| Telephone Number: | 603-929-5435 |
| Permit Number: | DEP Transmittal# X224236 |
| Source Tested: | One IC Engine (EU3) – Landfill Gas Treatment / Electric Generating Plant |
| Fuel: | Landfill Gas |
| Stack Dimensions: | Height 12' Internal Diameter – 16" |
| Sampling Location: | ~ 60" Downstream and ~ 48" Upstream from any flow disturbance |

- Senior Project Manager works directly with the site coordinator and the facility's operators during the testing to coordinate the testing. They are also responsible for operating and monitoring the instrumental test methods within the mobile test laboratory.
- Project Manager conducts, manages and/or supervises the wet test methods conducted at the sample location.
- The Site Coordinator is the facility's representative for the test program.

## 3.0 SUMMARY AND DISCUSSION OF RESULTS

The compliance testing results for Resource Control, Inc. – Fitchburg/Westminster Sanitary Landfill are shown in **Table 3-1**. The indicated pollutants are NMOC, CO and NOx emissions in units of the emission standard (lb/mmBtu & grams/BHP-Hr [for NOx only]). This data is an average of the three one-hour test runs conducted on Engine #3.

The reference test data are enclosed in **Appendices A & B** and the corresponding process data collected from the engine operations screen is included in **Appendix D**. This engine is rated for 2233 horsepower with ~1600 Kw of power produced. Per Waste Management of Massachusetts' correspondence (January 8, 2009) with Mr. Tom Cusson (MADEP), the engine was tested at the maximum achievable Kw.

**Table 3-1. Summary of Compliance Test Results**

| Parameter | Run 1 | Run 2 | Run 3 | Result | Permit Limit |
|---|---|---|---|---|---|
| **Engine #3 [EU03]** | | | | | |
| **1600 Kw** | | | | | |
| NOx lb/mmBtu<br>NOx g/BHP-Hr | 0.117<br>0.41 | 0.112<br>0.41 | 0.110<br>0.40 | 0.113 lb/mmBtu<br>0.40 g/BHP-Hr | 0.166 lb/mmBtu<br>0.60 g/BHP-Hr |
| CO lb/mmBtu | 0.625 | 0.632 | 0.624 | 0.627 lb/mmBtu | 0.83 lb/mmBtu |
| NMOC lb/mmBtu | 0.037 | 0.027 | 0.041 | 0.035 lb/mmBtu | 0.083 lb/mmBtu |
| **Exhaust Parameters** | | | | | |
| **Parameter** | **Run 1** | **Run 2** | **Run 3** | **Result** | |
| Stack Flow (DSCFM) | 4,510 | 4,750 | 4,754 | 4,671 | |
| Stack Temp ($F^{O}$) | 945.5 | 949.9 | 945.5 | 948.5 | |
| Exhaust Oxygen (%) | 8.30 | 8.40 | 8.33 | 8.35 | |

## 4.0 POLLUTANTS AND TEST METHODS

| | | |
|---|---|---|
| Pollutant Tested: | $NO_x$ | EPA Method 7E - 40 CFR 60, Appendix A |
| | CO | EPA Method 10 - 40 CFR 60, Appendix A |
| | NMOC | EPA Method 25A – 40 CFR 60, Appendix A |

## 5.0 TEST PROCEDURES AND RESULTS

### 5.10 Sampling Procedures

Testing was completed per EPA test methods 1, 2, 3A, 4, 7E, 10 and 18/25A defined in 40 CFR Part 60 Appendix A.

### 5.11 Volumetric Flow Rates

RMCEINC determined the number and location of the traverse points for volumetric flow rate measurement according to the procedures outlined in EPA Method 1. When determining the location and number of sample points, RMCEINC took into account the number of sample ports, duct configuration, and location of upstream and downstream flow disturbances. **Figure 5-1**, below, is a diagram of the engine showing the exhaust to the silencer and the ports we used for testing. **Figure 5-2** illustrates the port location and points used for the Method 2 traverse.

The flue gas velocity and volumetric flow rate were determined according to the procedures of EPA Method 2. A Type S pitot tube with a Type K thermocouple was used to measure velocity pressure and stack gas temperature at each sample point. Each pitot tube conformed to the geometric specifications of EPA Method 2 and was assigned a coefficient of 0.84. An umbilical cord connected the pitot tube to the meter box inclined manometer and digital temperature readout. RMCEINC leak-checked the pitot tube prior to and after conducting the flow traverse.

RMCEINC determined the flue gas composition and molecular weight using EPA Methods 3A and 4 procedures.

**Figure 5-1 – Engine Schematic / Diagram.**

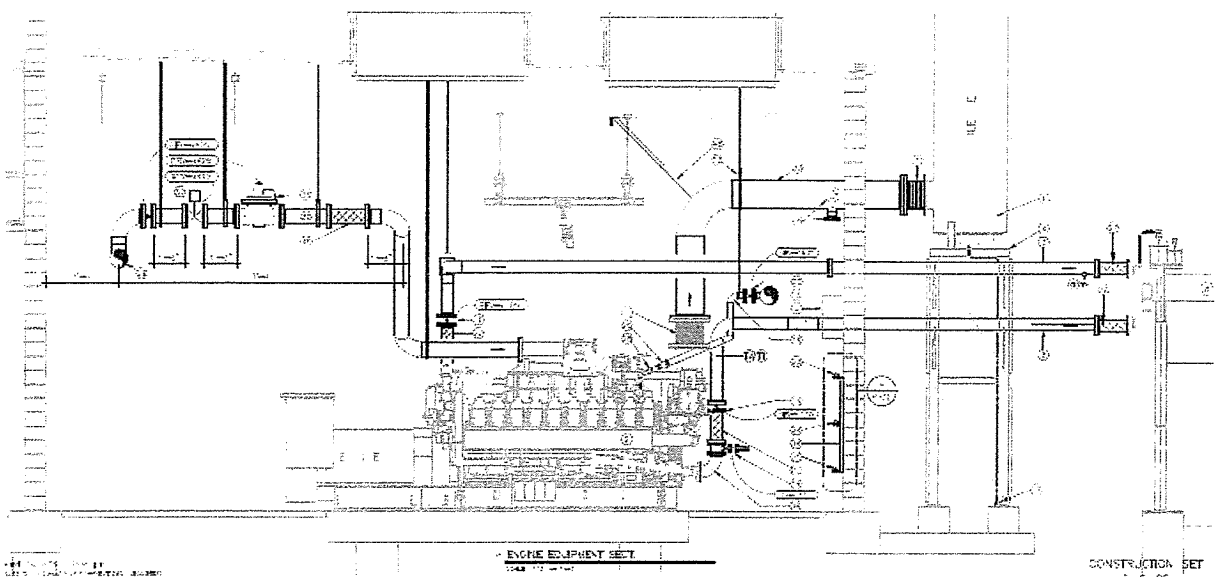

## Figure 5-2. EPA Method 1 Information – Engines 1-4

### METHOD 1 - SAMPLE AND VELOCITY TRAVERSES FOR CIRCULAR SOURCES

| | | | |
|---|---|---|---|
| Plant Name | Waste Management of Massachusetts | Date | 01/15/08 |
| Sampling Location | Fitchburg/Westminster Landfill | Project # | 2008-15096 |
| Operator | RC | # of Ports Available | 2 |
| Stack Type | Circular | # of Ports Used | 2 |
| Stack Size | Small | Port Inside Diameter | 2 |

| Circular Stack or Duct Diameter | | | |
|---|---|---|---|
| Distance to Far Wall of Stack | ($L_{fw}$) | 20.00 | in |
| Distance to Near Wall of Stack | ($L_{nw}$) | 4.00 | in |
| (=Lfw - Lnw) Diameter of Stack | (D) | 16.00 | in |
| (=3.14(D/2/Cunits)2) Area of Stack | ($A_s$) | 1.40 | $ft^2$ |

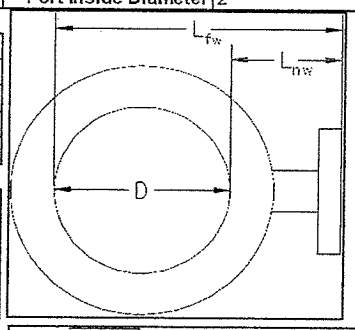


| Distance from Port to Disturbances | | | |
|---|---|---|---|
| Distance Upstream | (B) | 60.00 | in |
| (=B/D) Diameters Upstream | ($B_D$) | 3.75 | diameters |
| Distance Downstream | (A) | 48.00 | in |
| (=A/D) Diameters Downstream | ($A_D$) | 3.00 | diameters |

| Number of Traverse Points Required | | | |
|---|---|---|---|
| Diameters to Flow Disturbance | | Minimum Number of[1] Traverse Points | |
| Up Stream | Down Stream | Particulate Points | Velocity Points |
| 2.00-4.99 | 0.50-1.24 | 24 | 16 |
| 5.00-5.99 | 1.25-1.49 | 20 | 16 |
| 6.00-6.99 | 1.50-1.74 | 16 | 12 |
| 7.00-7.99 | 1.75-1.99 | 12 | 12 |
| >= 8.00 | >=2.00 | 8 or 12[2] | 8 or 12[2] |
| Upstream Spec | | 24 | 16 |
| Downstream Spec | | 8 | 8 |
| Traverse Pts Required | | 24 | 16 |

[1] Check Minimum Number of Points for the Upstream and Downstream conditions, then use the largest.
[2] 8 for Circular Stacks 12 to 24 inches
12 for Circular Stacks over 24 inches

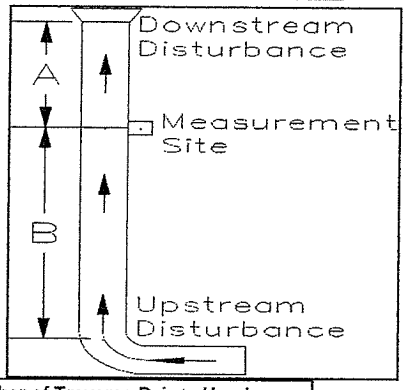


| Number of Traverse Points Used | | | |
|---|---|---|---|
| 2 | Ports by | 8 | Across |
| 16 | Pts Used | 16 | Required |
| ☐ | Particulate | ☑ | Velocity |

| Location of Traverse Points in Circular Stacks | | | | | | |
|---|---|---|---|---|---|---|
| Traverse Point Number | (Fraction of Stack Diameter from Inside Wall to Traverse Point) Number of Traverse Points on a Diameter | | | | | |
| | 2 | 4 | 6 | 8 | 10 | 12 |
| 1 | .146 | .067 | .044 | .032 | .026 | .021 |
| 2 | .854 | .250 | .146 | .105 | .082 | .067 |
| 3 | | .750 | .296 | .194 | .146 | .118 |
| 4 | | .933 | .704 | .323 | .226 | .177 |
| 5 | | | .854 | .677 | .342 | .250 |
| 6 | | | .956 | .806 | .658 | .356 |
| 7 | | | | .895 | .774 | .644 |
| 8 | | | | .968 | .854 | .750 |
| 9 | | | | | .918 | .823 |
| 10 | | | | | .974 | .882 |
| 11 | | | | | | .933 |
| 12 | | | | | | .979 |

| Traverse Point Locations | | | |
|---|---|---|---|
| Traverse Point Number | Fraction of Stack Diameter | Distance from Inside Wall | Distance Including Nipple Length |
| | | in | in |
| 1 | 0.032 | 4/8 | 4 4/8 |
| 2 | 0.105 | 1 5/8 | 5 5/8 |
| 3 | 0.194 | 3 1/8 | 7 1/8 |
| 4 | 0.323 | 5 1/8 | 9 1/8 |
| 5 | 0.677 | 10 7/8 | 14 7/8 |
| 6 | 0.806 | 12 7/8 | 16 7/8 |
| 7 | 0.895 | 14 3/8 | 18 3/8 |
| 8 | 0.968 | 15 4/8 | 19 4/8 |
| 9 | | | |
| 10 | | | |
| 11 | | | |
| 12 | | | |

### 5.12 Instrumental Test Equipment and Procedures

The test program includes the measurement of exhaust gas concentrations of CO, $NO_x$, $O_2$, and NMOC. RMCEINC used the procedures that conform to the requirements of Title 40 CFR Part 60, Appendix A, Methods 1, 2, 3A, 4, 7E, 10, and 18/25A. Each of the three test runs included a minimum of one hour of continuous flue gas sampling.

Concentration measurements of $O_2$, CO, $NO_x$, and NMOC were made according to EPA Methods 3A, 7E, 10 and 18/25A using the analyzers listed in **Table 5-1. Figure 5-3** is a schematic of the wet/dry extractive reference measurement gas sampling system used by RMCEINC. All components of the sampling system that contact the sample are stainless steel, glass, or Teflon.

RMCEINC used a standard probe sampling system. The manual sampling probe used was un-heated stainless steel tubing and 3-way valve to provide a means of conducting the three-point traverse and calibration checks. The probe assembly was constructed of Type 316 stainless steel. At the Fitchburg / Westminster Sanitary Landfill Facility, the stack temperature is over 600 degrees and the probe was not externally heated due to that excessive heat. A length of heated Teflon tubing, heated to over 250$^{O}$ F, was connected the probe and to a moisture removal chiller.

**TABLE 5-1 REFERENCE METHOD ANALYZERS**

| Parameter | Analyzer | Analytical Technique | Instrument Span |
|---|---|---|---|
| $NO_x$ | Thermo Environmental Instruments Model 10A | Chemiluminescence | 0-450, ppm |
| CO | Thermo Environmental Instruments Model 48 | Gas Filter Correlation | 0-900 ppm |
| NMOC | VIG Industries, Inc. | Flame Ionization Detection | 0-1000 ppm |
| $O_2$ | Teledyne – 3300 | Fuel Cell | 0-21 % |

**Figure 5-3. Reference Method Gas Sampling System Diagram**

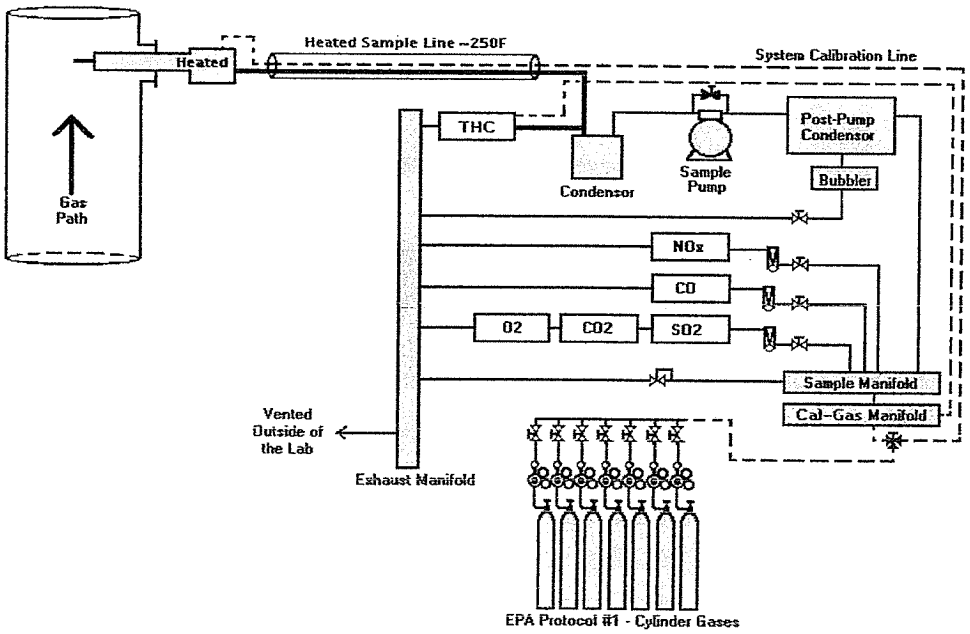

### 5.13 Instrumental Analytical Data

RMCEINC performed test runs to measures the flue gas for NMOC, $NO_x$ and CO in terms of an emission rate (lb/mmBtu & g/bhp-hr [for NOx]). A three-point (zero, mid-range, and high-range) analyzer calibration error check on each reference analyzer was performed before initiating the testing. This check is conducted after final calibration adjustments are made by injecting the calibration gases directly into each gas analyzer and recording the responses on the reference data acquisition system.

RMCEINC conducts zero and upscale calibration checks both before and after each test run in order to quantify measurement system calibration drift and sampling system bias. Upscale is either the low-, mid- or high-range gas, whichever most closely approximates the flue gas level. During these checks, the calibration gases are introduced into the sampling system through a 3-way valve assembly at the probe outlet so that the calibration gases are analyzed in the same manner as the flue gas samples.

The EPA Method 18 tedlar bag method was utilized for the collection of effluent for analysis of methane - as necessary. The methane concentrations were removed from the total VOM concentration to give total gaseous non-methane organic compounds (TGNMO) – in this case there was no methane to remove. The volumetric flow rate testing (Title 40 CFR 60, Appendix A, Methods 1-4), was conducted simultaneously with the reference method instrumental testing, and used to calculate the emission rate in terms of lb/Hr.

RMCEINC recorded the reference analyzer measurements as 1-minute and 60-minute averages on its DAS. All test run concentration results were determined from the average gas concentrations measured during the run and adjusted based on the zero and upscale sampling system bias check results (Equation 7E-1 presented in 40 CFR 60, Method 7E, Section 8). The reference NMOC, CO and $NO_x$ emission values in terms of pounds per mmBtu and grams per break horsepower hour [for NOx] were computed from each test run average of adjusted, dry basis CO, $NO_x$ and percent $O_2$ using the CFR Title 40 Part 60 Appendix A Method 19.

## 6.0 EQUIPMENT CALIBRATION AND QUALITY ASSURANCE

RMCEINC followed the calibration and quality assurance procedures of EPA Methods 1, 2, 3A, 4, 5, 7E, 10 and 18/25A throughout the test program. The maintenance for our meterboxes, probes, analyzers and a majority of our other test equipment is performed off site by either Clean Air Engineering or Millenium Instruments. These companies ensure that our equipment is operating correctly and within the specification of the respective methods. All equipment is calibrated in accordance with the EPA Methods and guidelines.

The results of sampling system bias and calibration drift tests for each test run are calculated and presented in the test report. Cylinder gases used during the testing are certified to meet or exceed EPA Protocol 1 requirements. The meter box calibrations, pitot tube inspections, calibration gas certificates of analysis and the analyzer quality assurance checks are included in **Appendix C**. Process data and the fuel analysis are included in **Appendix D**.

RMCEINC uses computers throughout the test program. Spreadsheets and software programs are checked in our office for accuracy. Software used by RMCEINC is structured to eliminate human errors in data entry where possible by automating the process. When possible RMCEINC, inputs field data directly into the DAS system and eliminates the hand written field data sheets. These systems provide an accurate measurement of the raw test data and are not used to modify or change test data in any manner. Equations used in these systems are taken directly from the CFR when possible and notations are provided if originated from an alternate source or customized in any manner.

## APPENDIX A. TEST SUMMARY SHEETS

**Emissions Summary**

# REFERENCE DATA SUMMARY

**Company:** Waste Management, Inc.
**Source:** Engine #3

**Date:** 3/18/2009
**Project #:** 2009-15096

| CAL | RUN # | Test Duration Start Time | End Time | O2 % | CO2 % | CO | NOx ppm | CH4 ppm | NMOC ppm | THC ppm | | | | | | 0 | NOx | lbs/mmBtu | NMOC | THC | DSCFM |
|---|---|---|---|---|---|---|---|---|---|---|---|---|---|---|---|---|---|---|---|---|---|
| | | 3:14 | | *DATA Link from the DATA Logger* | | | | | | | | | | | | | | | | | |
| | 1 | 3/18/2009 8:30 | 9:30 | 8.30 | 12.88 | 542.85 | 61.96 | 1415.00 | 32.18 | 482.39 | | | | | | 0.625 | 0.117 | | 0.037 | 0.240 | 4510.0 |
| 0:07 | 2 | 3/18/2009 9:37 | 10:37 | 8.40 | 11.24 | 544.59 | 58.61 | 1443.00 | 22.92 | 488.64 | | | | | | 0.632 | 0.112 | | 0.027 | 0.245 | 4750.0 |
| 0:07 | 3 | 3/18/2009 10:44 | **11:44** | 8.33 | 11.31 | 540.31 | 58.11 | 1462.00 | 35.23 | 499.08 | | | | | | 0.624 | 0.110 | | 0.041 | 0.249 | 4754.0 |
| | 4 | | 12:50 | | | | | | | | | | | | | | | | | | |
| | 5 | | 13:56 | | | | | | | | | | | | | | | | | | |
| | 6 | | 15:02 | | | | | | | | | | | | | | | | | | |
| | 7 | | 16:08 | | | | | | | | | | | | | | | | | | |
| | 8 | | 17:14 | | | | | | | | | | | | | | | | | | |
| | 9 | | 18:20 | | | | | | | | | | | | | | | | | | |
| | 10 | | 19:26 | | | | | | | | | | | | | | | | | | |
| | 11 | | 20:32 | | | | | | | | | | | | | | | | | | |
| | 12 | | 21:38 | | | | | | | | | | | | | | | | | | |
| | 13 | | 22:44 | | | | | | | | | | | | | | | | | | |
| | 14 | | 23:50 | | | | | | | | | | | | | | | | | | |
| | 15 | | 0:56 | | | | | | | | | | | | | | | | | | |
| | | | AVERAGE | 8.35 | 11.81 | 542.58 | 59.56 | 1440.00 | 30.11 | 490.04 | | | | | | 0.627 | 0.113 | | 0.035 | 0.245 | 4671 |

| | Start Time | End Time | O2 %w | CO2 %w | CO w | NOx ppmw | ppmw | NMOC ppmw | THC ppmw | % Load | | | | | 0 | NOx | lbs/Hr | NMOC | THC |
|---|---|---|---|---|---|---|---|---|---|---|---|---|---|---|---|---|---|---|---|
| | | | *Wet based measurements corrected from DATA Logger* | | | | | | | | | g/BHP-Hr | | | | | | | |
| 1 | 3/18/2009 8:30 | 9:30 | 7.27 | 11.28 | 475.52 | 54.27 | | | 550.70 | 100.00 | | | 2.17 | 0.41 | 10.67 | 2.00 | | | 4.10 |
| 2 | 3/18/2009 9:37 | 10:37 | 7.35 | 9.83 | 476.30 | 51.26 | | | 558.70 | 100.00 | | | 2.29 | 0.41 | 11.27 | 1.99 | | | 4.37 |
| 3 | 3/18/2009 10:44 | 11:44 | 7.32 | 9.93 | 474.49 | 51.03 | | | 568.30 | 100.00 | | | 2.27 | 0.40 | 11.19 | 1.98 | | | 4.47 |
| 4 | | 12:50 | | | | | | | | | | | | | | | | | |
| 5 | | 13:56 | | | | | | | | | | | | | | | | | |
| 6 | | 15:02 | | | | | | | | | | | | | | | | | |
| 7 | | 16:08 | | | | | | | | | | | | | | | | | |
| 8 | | 17:14 | | | | | | | | | | | | | | | | | |
| 9 | | 18:20 | | | | | | | | | | | | | | | | | |
| 10 | | 19:26 | | | | | | | | | | | | | | | | | |
| 11 | | 20:32 | | | | | | | | | | | | | | | | | |
| 12 | | 21:38 | | | | | | | | | | | | | | | | | |
| 13 | | 22:44 | | | | | | | | | | | | | | | | | |
| 14 | | 23:50 | | | | | | | | | | | | | | | | | |
| 15 | | 0:56 | | | | | | | | | | | | | | | | | |
| | | AVERAGE | 7.31 | 10.35 | 475.44 | 52.19 | | | 559.23 | 100.00 | | | 2.24 | 0.40 | 11.05 | 1.99 | | | 4.31 |

## APPENDIX B. FIELD TEST DATA W/ INSTRUMENTAL TEST DATA

**Method 1-4 Field Data**

**Flow Rate Determinations**

**Calibration Summaries**

**Instrumental Test Run Data**

Calibration Error Test at Run 1 . STRATA Version 2.01

Operator: RMC Environmental, Inc.
Plant Name: WM-Fitchburg
Location: Engine #3

Reference Cylinder Numbers

| | Zero | Low-range | Mid-range | High-range |
|---|---|---|---|---|
| O2 | CC177161 | | SG9135827 | SG9135827 |
| CO2 | CC177161 | | SG9197290 | SG9135827 |
| CO | SG9135827 | CC10309 | CC107994 | XC026080B |
| NOx | SG9135827 | CC177161 | SG11736 | CC208805 |
| THC | CC177161 | CC183604 | CC20045 | XC029562B |

Date/Time 3/18/2009 8:03:57 PASSED

| Analyte | O2 | CO2 | CO | NOx | THC |
|---|---|---|---|---|---|
| Units | % | % | ppm | ppm | ppm |
| Zero Ref Cyl | 0.00 | 0.00 | 0.00 | 0.00 | 0.00 |
| Zero Avg | 0.17 | 0.09 | -1.13 | -0.56 | 1.50 |
| Zero Error% | 0.80 | 0.50 | 0.10 | 0.20 | 0.20 |
| Low Ref Cyl | | | 255.80 | | 294.80 |
| Low Avg | | | 252.79 | | 297.90 |
| Low Error% | | | 0.30 | | 0.30 |
| Mid Ref Cyl | 12.00 | 10.91 | 596.70 | 115.30 | 501.70 |
| Mid Avg | 12.11 | 10.72 | 595.70 | 116.42 | 493.60 |
| Mid Error% | 0.50 | 1.00 | 0.10 | 0.40 | 0.80 |
| High Ref Cyl | 20.90 | 17.50 | 898.90 | 262.50 | 848.10 |
| High Avg | 20.78 | 17.56 | 886.00 | 260.84 | 836.50 |
| High Error% | 0.60 | 0.30 | 1.40 | 0.70 | 1.20 |

Initial System Bias Check for Run 1 . STRATA Version 2.01

| | | |
|---|---|---|
| Operator: | RMC Environmental, Inc. | |
| Plant Name: | WM-Fitchburg | |
| Location: | Engine #3 | |
| | Reference Cylinder Numbers | |
| | Zero | Span |
| O2 | CC177161 | SG9135827 |
| CO2 | CC177161 | SG9197290 |
| CO | SG9135827 | CC107994 |
| NOx | SG9135827 | SG11736 |
| THC | CC177161 | CC20045 |

| | | | | | |
|---|---|---|---|---|---|
| Date/Time | 3/18/2009 | 8:10:20 PASSED | | | |
| Analyte | O2 | CO2 | CO | NOx | THC |
| Units | % | % | ppm | ppm | ppm |
| Zero Ref Cyl | 0.00 | 0.00 | 0.00 | 0.00 | 0.00 |
| Zero Cal | 0.17 | 0.09 | -1.13 | -0.56 | 1.50 |
| Zero Avg | 0.55 | 0.06 | 0.93 | 2.55 | 9.60 |
| Zero Bias% | 1.80 | 0.20 | 0.20 | 1.20 | 0.80 |
| Zero Drift% | | | | | |
| Span Ref Cyl | 12.00 | 10.91 | 596.70 | 115.30 | 501.70 |
| Span Cal | 12.11 | 10.72 | 595.70 | 116.42 | 493.60 |
| Span Avg | 11.90 | 10.18 | 584.78 | 115.01 | 501.90 |
| Span Bias% | 1.00 | 3.00 | 1.20 | 0.60 | 0.80 |
| Span Drift% | | | | | |

Test Run 1 Begin. STRATA Version 2.01
Operator: RMC Environmental, Inc.
Plant Name: WM-Fitchburg
Location: Engine #3

| | | O2 | CO2 | CO | NOx | THC |
|---|---|---|---|---|---|---|
| | | % | % | ppm | ppm | ppm |
| Begin calculating run averages | | | | | | |
| 3/18/2009 | 8:31:05 | 8.426 | 10.952 | 532.8 | 67.27 | 527.5 |
| 3/18/2009 | 8:32:05 | 8.432 | 10.951 | 530.77 | 66.17 | 525.4 |
| 3/18/2009 | 8:33:04 | 8.428 | 11.264 | 531.64 | 65.91 | 532 |
| 3/18/2009 | 8:34:05 | 8.428 | 11.326 | 528.06 | 64.29 | 545.8 |
| 3/18/2009 | 8:35:05 | 8.417 | 11.389 | 530.21 | 65.19 | 533 |
| 3/18/2009 | 8:36:04 | 8.4 | 11.556 | 532.4 | 66.35 | 533.4 |
| 3/18/2009 | 8:37:05 | 8.389 | 11.928 | 531.08 | 65.81 | 532.3 |
| 3/18/2009 | 8:38:05 | 8.398 | 11.922 | 529.42 | 64.9 | 523.8 |
| 3/18/2009 | 8:39:06 | 8.4 | 11.938 | 530.05 | 64.33 | 537.4 |
| 3/18/2009 | 8:40:05 | 8.395 | 12.046 | 533.26 | 65.42 | 520.2 |
| 3/18/2009 | 8:41:05 | 8.39 | 12.074 | 529.97 | 63.65 | 546.9 |
| 3/18/2009 | 8:42:06 | 8.382 | 12.069 | 531.22 | 64.44 | 533.1 |
| 3/18/2009 | 8:43:04 | 8.382 | 12.073 | 527.03 | 62.37 | 534.6 |
| 3/18/2009 | 8:44:05 | 8.408 | 12.056 | 532.01 | 64.5 | 549.1 |
| 3/18/2009 | 8:45:06 | 8.387 | 12.021 | 531.49 | 64.63 | 536.9 |
| 3/18/2009 | 8:46:04 | 8.397 | 11.976 | 529.61 | 62.8 | 545.4 |
| 3/18/2009 | 8:47:05 | 8.393 | 12.204 | 531.18 | 64.16 | 541.1 |
| 3/18/2009 | 8:48:06 | 8.398 | 12.29 | 528.32 | 62.85 | 548.3 |
| 3/18/2009 | 8:49:04 | 8.416 | 12.26 | 531.84 | 66.13 | 551.9 |
| 3/18/2009 | 8:50:05 | 8.398 | 12.291 | 528.9 | 64.61 | 555.9 |
| 3/18/2009 | 8:51:06 | 8.392 | 12.371 | 532.08 | 64.96 | 550.6 |
| 3/18/2009 | 8:52:04 | 8.4 | 12.389 | 529.07 | 62.5 | 550.7 |
| 3/18/2009 | 8:53:05 | 8.407 | 12.285 | 531.14 | 64.2 | 563.3 |
| 3/18/2009 | 8:54:06 | 8.406 | 12.314 | 529.18 | 64.53 | 543.5 |
| 3/18/2009 | 8:55:04 | 8.413 | 12.277 | 529.96 | 63.85 | 552.6 |
| 3/18/2009 | 8:56:05 | 8.395 | 12.366 | 526.52 | 62.14 | 544.7 |
| 3/18/2009 | 8:57:06 | 8.393 | 12.314 | 525.45 | 61.39 | 550.5 |
| 3/18/2009 | 8:58:04 | 8.42 | 12.28 | 529.97 | 63.59 | 545.4 |
| 3/18/2009 | 8:59:05 | 8.408 | 12.251 | 528.54 | 63.38 | 544.8 |
| 3/18/2009 | 9:00:06 | 8.425 | 12.263 | 530.79 | 64.54 | 555.5 |
| 3/18/2009 | 9:01:04 | 8.416 | 12.249 | 525.41 | 63.34 | 548.6 |
| 3/18/2009 | 9:02:05 | 8.411 | 12.307 | 530.15 | 64.12 | 547.9 |
| 3/18/2009 | 9:03:06 | 8.4 | 12.505 | 530.18 | 63.8 | 555.4 |
| 3/18/2009 | 9:04:04 | 8.414 | 12.574 | 533.01 | 65.98 | 555.9 |
| 3/18/2009 | 9:05:05 | 8.403 | 12.599 | 527.91 | 64.73 | 554.3 |
| 3/18/2009 | 9:06:04 | 8.407 | 12.580* | 526.95 | 62.54 | 563.6 |
| 3/18/2009 | 9:07:05 | 8.4 | 12.588 | 530.25 | 63.68 | 554.9 |
| 3/18/2009 | 9:08:05 | 8.409 | 12.609 | 529.22 | 63.48 | 550.1 |
| 3/18/2009 | 9:09:04 | 8.406 | 12.615 | 529.11 | 63.14 | 561.3 |
| 3/18/2009 | 9:10:05 | 8.41 | 12.662 | 524.41 | 61.52 | 563.8 |

| | | | | | | |
|---|---|---|---|---|---|---|
| 3/18/2009 | 9:11:05 | 8.409 | 12.693 | 527.79 | 61.25 | 557.1 |
| 3/18/2009 | 9:12:04 | 8.395 | 12.719 | 527.25 | 61.64 | 562.9 |
| 3/18/2009 | 9:13:05 | 8.397 | 12.694 | 529.99 | 63.86 | 568.9 |
| 3/18/2009 | 9:14:06 | 8.394 | 12.696 | 524.6 | 61.22 | 558.3 |
| 3/18/2009 | 9:15:04 | 8.377 | 12.725 | 526.94 | 60.91 | 571.9 |
| 3/18/2009 | 9:16:05 | 8.392 | 12.703 | 530.54 | 62.11 | 562.4 |
| 3/18/2009 | 9:17:06 | 8.366 | 12.714 | 525.5 | 61.03 | 544.4 |
| 3/18/2009 | 9:18:04 | 8.396 | 12.69 | 531.9 | 62.74 | 565 |
| 3/18/2009 | 9:19:05 | 8.407 | 12.684 | 528.78 | 62.33 | 571.4 |
| 3/18/2009 | 9:20:04 | 8.411 | 12.682 | 531.96 | 63.13 | 567.7 |
| 3/18/2009 | 9:21:05 | 8.391 | 12.71 | 531.99 | 63.66 | 570.5 |
| 3/18/2009 | 9:22:06 | 8.388 | 11.914 | 531.69 | 63.24 | 577.7 |
| 3/18/2009 | 9:23:04 | 8.384 | 11.841 | 531.56 | 63.9 | 563.2 |
| 3/18/2009 | 9:24:05 | 8.393 | 11.839 | 528.39 | 62.4 | 570.4 |
| 3/18/2009 | 9:25:05 | 8.395 | 11.815 | 533.04 | 63.26 | 567.9 |
| 3/18/2009 | 9:26:04 | 8.384 | 11.828 | 531.83 | 63.91 | 568.5 |
| 3/18/2009 | 9:27:05 | 8.373 | 11.805 | 534.48 | 64.68 | 572.7 |
| 3/18/2009 | 9:28:05 | 8.392 | 11.811 | 529.61 | 64.51 | 560.8 |
| 3/18/2009 | 9:29:06 | 8.364 | 11.836 | 530.99 | 63.63 | 556.9 |
| 3/18/2009 | 9:30:04 | 8.37 | 11.854 | 534.02 | 64.16 | 563.1 |
| Average of Test Run | | O2 | CO2 | CO | NOx | THC |
| | | % | % | ppm | ppm | ppm |
| 3/18/2009 | 9:30:05 | 8.4 | 12.187* | 529.89 | 63.75 | 551.9 |

Test Run 1 End

Final System Bias Check for Run 1 . STRATA Version 2.01

| | | |
|---|---|---|
| Operator: | RMC Environmental, Inc. | |
| Plant Name: | WM-Fitchburg | |
| Location: | Engine #3 | |
| | Reference Cylinder Numbers | |
| | Zero | Span |
| O2 | CC177161 | SG9135827 |
| CO2 | CC177161 | SG9197290 |
| CO | SG9135827 | CC107994 |
| NOx | SG9135827 | SG11736 |
| THC | CC177161 | CC20045 |

| | | | | | |
|---|---|---|---|---|---|
| Date/Time | 3/18/2009 | 9:34:43 PASSED | | | |
| Analyte | O2 | CO2 | CO | NOx | THC |
| Units | % | % | ppm | ppm | ppm |
| Zero Ref Cyl | 0.00 | 0.00 | 0.00 | 0.00 | 0.00 |
| Zero Cal | 0.17 | 0.09 | -1.13 | -0.56 | 1.50 |
| Zero Avg | 0.45 | 0.31 | 1.25 | 5.58 | 4.40 |
| Zero Bias% | 1.30 | 1.20 | 0.30 | 2.50 | 0.30 |
| Zero Drift% | -0.50 | 1.40 | 0.00 | 1.20 | -0.50 |
| Span Ref Cyl | 12.00 | 10.91 | 596.70 | 115.30 | 501.70 |
| Span Cal | 12.11 | 10.72 | 595.70 | 116.42 | 493.60 |
| Span Avg | 11.94 | 10.52 | 579.91 | 115.24 | 504.90 |
| Span Bias% | 0.80 | 1.10 | 1.80 | 0.50 | 1.10 |
| Span Drift% | 0.20 | 1.90 | -0.50 | 0.10 | 0.30 |
| | | | | | |
| Ini Zero Avg | 0.55 | 0.06 | 0.93 | 2.55 | 9.60 |
| Ini Span Avg | 11.90 | 10.18 | 584.78 | 115.01 | 501.90 |
| Run Avg | 8.40 | 12.19 | 529.89 | 63.75 | 551.90 |
| Co | 0.50 | 0.19 | 1.09 | 4.07 | 7.00 |
| Cm | 11.92 | 10.35 | 582.35 | 115.13 | 503.40 |
| Correct Avg | 8.30 | 12.88 | 542.85 | 61.96 | 550.70 |

Test Run 2 Begin. STRATA Version 2.01
Operator: RMC Environmental, Inc.
Plant Name: WM-Fitchburg
Location: Engine #3

| | | O2 | CO2 | CO | NOx | THC |
|---|---|---|---|---|---|---|
| | | % | % | ppm | ppm | ppm |
| Begin calculating run averages | | | | | | |
| 3/18/2009 | 9:38:02 | 8.397 | 10.839 | 530.7 | 60.52 | 558.6 |
| 3/18/2009 | 9:39:03 | 8.406 | 10.846 | 529.8 | 61.7 | 556.9 |
| 3/18/2009 | 9:40:02 | 8.655 | 10.86 | 527.24 | 60.26 | 553.2 |
| 3/18/2009 | 9:41:03 | 9.223 | 10.874 | 531.71 | 61.44 | 540 |
| 3/18/2009 | 9:42:03 | 9.278 | 10.867 | 530.31 | 61.23 | 535.1 |
| 3/18/2009 | 9:43:02 | 9.266 | 10.854 | 534.04 | 62.2 | 546 |
| 3/18/2009 | 9:44:03 | 9.073 | 10.835 | 530.58 | 61.7 | 560.3 |
| 3/18/2009 | 9:45:02 | 8.692 | 10.834 | 532.26 | 62.67 | 576.6 |
| 3/18/2009 | 9:46:02 | 8.499 | 10.849 | 529.43 | 62.07 | 552 |
| 3/18/2009 | 9:47:03 | 8.48 | 10.842 | 529.29 | 61.52 | 551.4 |
| 3/18/2009 | 9:48:02 | 8.467 | 10.859 | 528.31 | 61.03 | 554.9 |
| 3/18/2009 | 9:49:02 | 8.466 | 10.85 | 528.21 | 60.31 | 546.7 |
| 3/18/2009 | 9:50:03 | 8.464 | 10.848 | 532.69 | 62 | 558.9 |
| 3/18/2009 | 9:51:02 | 8.466 | 10.85 | 528.1 | 61.11 | 569.1 |
| 3/18/2009 | 9:52:03 | 8.45 | 10.847 | 531.1 | 61.83 | 546.6 |
| 3/18/2009 | 9:53:03 | 8.451 | 10.857 | 530.16 | 61.62 | 559.6 |
| 3/18/2009 | 9:54:02 | 8.465 | 10.854 | 532.56 | 61.59 | 557.6 |
| 3/18/2009 | 9:55:03 | 8.453 | 10.873 | 526.58 | 60.23 | 556.5 |
| 3/18/2009 | 9:56:03 | 8.451 | 10.855 | 530.13 | 60.92 | 554.1 |
| 3/18/2009 | 9:57:02 | 8.453 | 10.835 | 530.68 | 61.35 | 573.8 |
| 3/18/2009 | 9:58:03 | 8.441 | 10.871 | 529.83 | 61.27 | 547.8 |
| 3/18/2009 | 9:59:03 | 8.437 | 10.861 | 531 | 61.73 | 545.5 |
| 3/18/2009 | 10:00:02 | 8.446 | 10.861 | 526.26 | 60.6 | 547.7 |
| 3/18/2009 | 10:01:02 | 8.439 | 10.851 | 529.75 | 61.33 | 553.3 |
| 3/18/2009 | 10:02:03 | 8.424 | 10.851 | 527.2 | 61.01 | 551.3 |
| 3/18/2009 | 10:03:03 | 8.453 | 10.83 | 528.47 | 61.32 | 552.8 |
| 3/18/2009 | 10:04:02 | 8.391 | 10.839 | 525.76 | 61.43 | 551.3 |
| 3/18/2009 | 10:05:03 | 8.394 | 10.858 | 526.04 | 60.66 | 564.8 |
| 3/18/2009 | 10:06:03 | 8.398 | 10.87 | 528.6 | 60.66 | 556.6 |
| 3/18/2009 | 10:07:02 | 8.391 | 10.873 | 525.75 | 59.81 | 566.4 |
| 3/18/2009 | 10:08:02 | 8.394 | 10.88 | 528.16 | 60.82 | 553 |
| 3/18/2009 | 10:09:03 | 8.383 | 10.883 | 525.49 | 59.58 | 551.8 |
| 3/18/2009 | 10:10:03 | 8.399 | 10.866 | 530.74 | 61.58 | 555.6 |
| 3/18/2009 | 10:11:02 | 8.387 | 10.876 | 529.9 | 62.21 | 549.6 |
| 3/18/2009 | 10:12:02 | 8.391 | 10.863 | 528.28 | 62.28 | 556.5 |
| 3/18/2009 | 10:13:03 | 8.403 | 10.847 | 526.26 | 61.64 | 570.6 |
| 3/18/2009 | 10:14:03 | 8.389 | 10.861 | 526.34 | 61.69 | 557.1 |
| 3/18/2009 | 10:15:02 | 8.38 | 10.862 | 527.78 | 61.53 | 558.9 |
| 3/18/2009 | 10:16:03 | 8.379 | 10.872 | 525.93 | 61.02 | 546.3 |
| 3/18/2009 | 10:17:03 | 8.374 | 10.867 | 529.61 | 61.6 | 542.7 |

| | | | | | | |
|---|---|---|---|---|---|---|
| 3/18/2009 | 10:18:02 | 8.358 | 10.877 | 524.38 | 60.31 | 559.3 |
| 3/18/2009 | 10:19:02 | 8.363 | 10.877 | 530.08 | 61.17 | 551.1 |
| 3/18/2009 | 10:20:03 | 8.392 | 10.862 | 528.39 | 61.75 | 585.9 |
| 3/18/2009 | 10:21:03 | 8.364 | 10.891 | 522.55 | 59.46 | 545.6 |
| 3/18/2009 | 10:22:02 | 8.358 | 10.863 | 527.35 | 60.28 | 552.5 |
| 3/18/2009 | 10:23:02 | 8.374 | 10.845 | 524.88 | 60.46 | 566 |
| 3/18/2009 | 10:24:03 | 8.384 | 10.864 | 527.46 | 60.93 | 551.8 |
| 3/18/2009 | 10:25:04 | 8.369 | 10.897 | 527.38 | 60.93 | 554 |
| 3/18/2009 | 10:26:02 | 8.363 | 10.902 | 529.03 | 61.92 | 547.5 |
| 3/18/2009 | 10:27:03 | 8.347 | 10.902 | 524.44 | 60.52 | 561.7 |
| 3/18/2009 | 10:28:03 | 8.379 | 10.899 | 527.43 | 61.1 | 548.3 |
| 3/18/2009 | 10:29:02 | 8.369 | 10.904 | 527.95 | 60.79 | 551.6 |
| 3/18/2009 | 10:30:03 | 8.374 | 10.922 | 527.19 | 60.84 | 560.4 |
| 3/18/2009 | 10:31:03 | 8.395 | 10.916 | 527.37 | 61.34 | 566.9 |
| 3/18/2009 | 10:32:02 | 8.381 | 10.919 | 524.6 | 59.86 | 561.7 |
| 3/18/2009 | 10:33:03 | 8.377 | 10.899 | 529.83 | 62.02 | 553.3 |
| 3/18/2009 | 10:34:03 | 8.378 | 10.908 | 524.27 | 60.37 | 571.1 |
| 3/18/2009 | 10:35:02 | 8.371 | 10.91 | 528.4 | 60.7 | 551 |
| 3/18/2009 | 10:36:02 | 8.376 | 10.921 | 525.18 | 60.11 | 558.4 |
| 3/18/2009 | 10:37:03 | 8.38 | 10.908 | 529.84 | 62.57 | 565 |
| Average of Test Run | | O2 | CO2 | CO | NOx | THC |
| | | % | % | ppm | ppm | ppm |
| 3/18/2009 | 10:37:03 | 8.468 | 10.869 | 528.32 | 61.14 | 555.8 |

Test Run 2 End

Final System Bias Check for Run 2 . STRATA Version 2.01

| | | |
|---|---|---|
| Operator: | RMC Environmental, Inc. | |
| Plant Name: | WM-Fitchburg | |
| Location: | Engine #3 | |
| | Reference Cylinder Numbers | |
| | Zero | Span |
| O2 | CC177161 | SG9135827 |
| CO2 | CC177161 | SG9197290 |
| CO | SG9135827 | CC107994 |
| NOx | SG9135827 | SG11736 |
| THC | CC177161 | CC20045 |

| | | | | | |
|---|---|---|---|---|---|
| Date/Time | 3/18/2009 | 10:42:14 PASSED | | | |
| Analyte | O2 | CO2 | CO | NOx | THC |
| Units | % | % | ppm | ppm | ppm |
| Zero Ref Cyl | 0.00 | 0.00 | 0.00 | 0.00 | 0.00 |
| Zero Cal | 0.17 | 0.09 | -1.13 | -0.56 | 1.50 |
| Zero Avg | 0.40 | 0.27 | 0.90 | 5.58 | 4.60 |
| Zero Bias% | 1.10 | 1.00 | 0.20 | 2.50 | 0.30 |
| Zero Drift% | -0.20 | -0.20 | 0.00 | 0.00 | 0.00 |
| Span Ref Cyl | 12.00 | 10.91 | 596.70 | 115.30 | 501.70 |
| Span Cal | 12.11 | 10.72 | 595.70 | 116.42 | 493.60 |
| Span Avg | 11.89 | 10.59 | 577.63 | 114.53 | 494.30 |
| Span Bias% | 1.10 | 0.70 | 2.00 | 0.80 | 0.10 |
| Span Drift% | -0.30 | 0.40 | -0.30 | -0.30 | -1.10 |
| | | | | | |
| Ini Zero Avg | 0.45 | 0.31 | 1.25 | 5.58 | 4.40 |
| Ini Span Avg | 11.94 | 10.52 | 579.91 | 115.24 | 504.90 |
| Run Avg | 8.47 | 10.87 | 528.32 | 61.14 | 555.80 |
| Co | 0.43 | 0.29 | 1.07 | 5.58 | 4.50 |
| Cm | 11.92 | 10.56 | 578.77 | 114.89 | 499.60 |
| Correct Avg | 8.40 | 11.24 | 544.59 | 58.61 | 558.70 |

Test Run 3 Begin. STRATA Version 2.01
Operator: RMC Environmental, Inc.
Plant Name: WM-Fitchburg
Location: Engine #3

| | | O2 | CO2 | CO | NOx | THC |
|---|---|---|---|---|---|---|
| | | % | % | ppm | ppm | ppm |
| Begin calculating run averages | | | | | | |
| 3/18/2009 | 10:45:05 | 8.373 | 10.853 | 523.88 | 61.12 | 544.3 |
| 3/18/2009 | 10:46:05 | 8.372 | 10.939 | 526.56 | 61.19 | 535.7 |
| 3/18/2009 | 10:47:04 | 8.362 | 10.957 | 524.89 | 60.55 | 543.5 |
| 3/18/2009 | 10:48:05 | 8.364 | 10.956 | 529.13 | 61.87 | 536.7 |
| 3/18/2009 | 10:49:04 | 8.351 | 10.937 | 524.1 | 61.32 | 535 |
| 3/18/2009 | 10:50:05 | 8.372 | 10.924 | 526.58 | 61.69 | 551 |
| 3/18/2009 | 10:51:06 | 8.371 | 10.91 | 526.54 | 61.78 | 547.1 |
| 3/18/2009 | 10:52:04 | 8.366 | 10.913 | 525.13 | 61.73 | 536.9 |
| 3/18/2009 | 10:53:05 | 8.367 | 10.915 | 526.6 | 63.04 | 536 |
| 3/18/2009 | 10:54:06 | 8.372 | 10.911 | 521.99 | 60.38 | 537.2 |
| 3/18/2009 | 10:55:04 | 8.38 | 10.898 | 526.62 | 61.31 | 554.6 |
| 3/18/2009 | 10:56:05 | 8.373 | 10.927 | 522.9 | 60.41 | 552.4 |
| 3/18/2009 | 10:57:04 | 8.38 | 10.931 | 525.77 | 61.66 | 552.7 |
| 3/18/2009 | 10:58:05 | 8.368 | 10.926 | 521.27 | 60.71 | 548.2 |
| 3/18/2009 | 10:59:06 | 8.367 | 10.919 | 524.46 | 60.16 | 555.8 |
| 3/18/2009 | 11:00:04 | 8.365 | 10.935 | 526.3 | 61.37 | 550.1 |
| 3/18/2009 | 11:01:05 | 8.356 | 10.947 | 525.07 | 61.3 | 532.2 |
| 3/18/2009 | 11:02:06 | 8.356 | 10.937 | 522.4 | 60.13 | 544.9 |
| 3/18/2009 | 11:03:04 | 8.356 | 10.911 | 525.03 | 61.08 | 548.4 |
| 3/18/2009 | 11:04:05 | 8.363 | 10.908 | 527.12 | 62.52 | 550.3 |
| 3/18/2009 | 11:05:04 | 8.375 | 10.906 | 524.4 | 61.68 | 550.6 |
| 3/18/2009 | 11:06:04 | 8.351 | 10.921 | 523.53 | 61.68 | 542.6 |
| 3/18/2009 | 11:07:05 | 8.354 | 10.917 | 522.92 | 60.9 | 543.1 |
| 3/18/2009 | 11:08:04 | 8.357 | 10.907 | 525.38 | 62.55 | 537.5 |
| 3/18/2009 | 11:09:04 | 8.358 | 10.911 | 522.32 | 60.97 | 544.8 |
| 3/18/2009 | 11:10:05 | 8.363 | 10.915 | 524.12 | 61.41 | 552.1 |
| 3/18/2009 | 11:11:04 | 8.367 | 10.929 | 521.09 | 60.11 | 553.6 |
| 3/18/2009 | 11:12:04 | 8.36 | 10.919 | 523.46 | 61.32 | 544.7 |
| 3/18/2009 | 11:13:05 | 8.36 | 10.925 | 524.85 | 61.82 | 545.6 |
| 3/18/2009 | 11:14:04 | 8.358 | 10.92 | 525.64 | 61.71 | 542.1 |
| 3/18/2009 | 11:15:05 | 8.354 | 10.926 | 521.73 | 60.9 | 529 |
| 3/18/2009 | 11:16:05 | 8.359 | 10.92 | 525.07 | 61.67 | 545.3 |
| 3/18/2009 | 11:17:06 | 8.35 | 10.924 | 524.39 | 61.67 | 549.1 |
| 3/18/2009 | 11:18:04 | 8.347 | 10.931 | 522.6 | 61.45 | 545.4 |
| 3/18/2009 | 11:19:05 | 8.337 | 10.929 | 521.67 | 61.19 | 556.6 |
| 3/18/2009 | 11:20:05 | 8.36 | 10.893 | 521.96 | 60.68 | 561.3 |
| 3/18/2009 | 11:21:05 | 8.349 | 10.912 | 524.63 | 62.62 | 544.5 |
| 3/18/2009 | 11:22:04 | 8.337 | 10.918 | 521.01 | 60.77 | 539.4 |
| 3/18/2009 | 11:23:04 | 8.357 | 10.882 | 523.83 | 61.38 | 554.9 |
| 3/18/2009 | 11:24:05 | 8.348 | 10.897 | 519.15 | 60.19 | 555.4 |

| | | | | | | |
|---|---|---|---|---|---|---|
| 3/18/2009 | 11:25:05 | 8.338 | 10.901 | 520.51 | 60.53 | 545.6 |
| 3/18/2009 | 11:26:05 | 8.335 | 10.905 | 521.7 | 60.54 | 555.8 |
| 3/18/2009 | 11:27:04 | 8.335 | 10.9 | 524.94 | 61.41 | 549.1 |
| 3/18/2009 | 11:28:04 | 8.338 | 10.921 | 518.62 | 60.87 | 542.4 |
| 3/18/2009 | 11:29:05 | 8.321 | 10.891 | 521.55 | 59.84 | 573.8 |
| 3/18/2009 | 11:30:05 | 8.343 | 10.881 | 524.25 | 61.42 | 568.4 |
| 3/18/2009 | 11:31:05 | 8.318 | 10.876 | 522.88 | 61.12 | 572.3 |
| 3/18/2009 | 11:32:04 | 8.335 | 10.876 | 524.15 | 62.39 | 604.9 |
| 3/18/2009 | 11:33:04 | 8.315 | 10.906 | 517.61 | 59.91 | 614.7 |
| 3/18/2009 | 11:34:05 | 8.331 | 10.907 | 522.17 | 61.05 | 608.1 |
| 3/18/2009 | 11:35:06 | 8.339 | 10.9 | 520.52 | 61.42 | 610.1 |
| 3/18/2009 | 11:36:04 | 8.34 | 10.887 | 522.46 | 61.91 | 608.9 |
| 3/18/2009 | 11:37:05 | 8.349 | 10.876 | 519.97 | 61.42 | 595.3 |
| 3/18/2009 | 11:38:05 | 8.363 | 10.863 | 519.94 | 62.22 | 626.4 |
| 3/18/2009 | 11:39:04 | 8.341 | 10.887 | 519.6 | 61.97 | 614.6 |
| 3/18/2009 | 11:40:04 | 8.351 | 10.896 | 516.78 | 61.26 | 621.3 |
| 3/18/2009 | 11:41:05 | 8.344 | 10.886 | 520.16 | 61.57 | 603.6 |
| 3/18/2009 | 11:42:06 | 8.342 | 10.869 | 517.53 | 60.82 | 601.9 |
| 3/18/2009 | 11:43:04 | 8.334 | 10.847 | 521.78 | 61.39 | 585.9 |
| 3/18/2009 | 11:44:04 | 8.346 | 10.821 | 523.23 | 62.5 | 598.5 |

| Average of Test Run | | O2 | CO2 | CO | NOx | THC |
|---|---|---|---|---|---|---|
| | | % | % | ppm | ppm | ppm |
| 3/18/2009 | 11:44:04 | 8.353 | 10.907 | 523.1 | 61.29 | 560.6 |

Test Run 3 End

Final System Bias Check for Run 3 . STRATA Version 2.01

| | | |
|---|---|---|
| Operator: | RMC Environmental, Inc. | |
| Plant Name: | WM-Fitchburg | |
| Location: | Engine #3 | |
| | Reference Cylinder Numbers | |
| | Zero | Span |
| O2 | CC177161 | SG9135827 |
| CO2 | CC177161 | SG9197290 |
| CO | SG9135827 | CC107994 |
| NOx | SG9135827 | SG11736 |
| THC | CC177161 | CC20045 |

| | | | | | |
|---|---|---|---|---|---|
| Date/Time | 3/18/2009 | 11:49:54 PASSED | | | |
| Analyte | O2 | CO2 | CO | NOx | THC |
| Units | % | % | ppm | ppm | ppm |
| Zero Ref Cyl | 0.00 | 0.00 | 0.00 | 0.00 | 0.00 |
| Zero Cal | 0.17 | 0.09 | -1.13 | -0.56 | 1.50 |
| Zero Avg | 0.37 | 0.27 | 0.16 | 6.18 | 2.80 |
| Zero Bias% | 1.00 | 1.00 | 0.10 | 2.70 | 0.10 |
| Zero Drift% | -0.10 | 0.00 | -0.10 | 0.20 | -0.20 |
| Span Ref Cyl | 12.00 | 10.91 | 596.70 | 115.30 | 501.70 |
| Span Cal | 12.11 | 10.72 | 595.70 | 116.42 | 493.60 |
| Span Avg | 11.83 | 10.47 | 577.65 | 117.12 | 496.30 |
| Span Bias% | 1.30 | 1.40 | 2.00 | 0.30 | 0.30 |
| Span Drift% | -0.30 | -0.70 | 0.00 | 1.00 | 0.20 |
| | | | | | |
| Ini Zero Avg | 0.40 | 0.27 | 0.90 | 5.58 | 4.60 |
| Ini Span Avg | 11.89 | 10.59 | 577.63 | 114.53 | 494.30 |
| Run Avg | 8.35 | 10.91 | 523.10 | 61.29 | 560.60 |
| Co | 0.39 | 0.27 | 0.53 | 5.88 | 3.70 |
| Cm | 11.86 | 10.53 | 577.64 | 115.82 | 495.30 |
| Correct Avg | 8.33 | 11.31 | 540.31 | 58.11 | 568.30 |

# METHOD 4 RUN SUMMARY SHEET

**Company:** Waste Management of Massachusetts
**Source:** WMI - Fitchburg Landfill
**Test Location:** Engine 3

**Load:** 1600 KW

| **Run:** | **M4-R1** | **M4-R2** | **M4-R3** |
|---|---|---|---|
| Flow Runs: | 1 | 2 | 3 |
| Start Time: | 3/18/2009 8:30 | 3/18/2009 9:37 | 3/18/2009 10:44 |
| End Time: | 3/18/2009 9:30 | 3/18/2009 10:37 | 3/18/2009 11:44 |

**RUN DATA**

| | | | |
|---|---|---|---|
| Meter voume start (cu. ft.): | 314.407 | 338.600 | 362.600 |
| Meter volume finish (cu. ft.): | 338.425 | 362.471 | 386.902 |
| Meter calib. factor (Y): | 0.9830 | 0.9830 | 0.9830 |
| Barometric pressure (in. Hg): | 29.85 | 29.85 | 29.85 |
| Average Delta-H (in. H2O): | 1.90 | 1.90 | 1.90 |
| Gas meter temperature (deg F): | 80.0 | 85.0 | 87.0 |
| Sil-Gel total wt. H2O collected (grams): | 8.7 | 11.5 | 7.2 |
| Impinger total volume H2O collected (ml): | 61 | 58 | 61 |

**CALCULATED RESULTS**

| | | | |
|---|---|---|---|
| Gas volume sampled (DSCF)*: | 23.139 | 22.777 | 23.104 |
| Water vapor volume (SCF)*: | 3.281 | 3.271 | 3.210 |
| **Moisture content (% volume):** | **12.4** | **12.6** | **12.2** |

* 68 deg F (20 deg C) - 29.92 in. Hg

# VOLUMETRIC FLOW RATE DETERMINATION

**Company:** Waste Management of Massachusetts
**Source:** WMI - Fitchburg Landfill
**Test Location:** Engine 3

**Conducted By:** GC/RC

**Load:** 1600 KW
**Run:** 1
**Start Time:** 3/18/2009 8:30
**End Time:** 3/18/2009 9:30

## TEST DATA

| Test Point | Delta P (in H2O) | Temp. (Deg F) | Test Point | Delta P (in H2O) | Temp. (Deg F) |
|---|---|---|---|---|---|
| A-1 | 3.420 | 941 | B-5 | 2.950 | 949 |
| A-2 | 3.480 | 941 | B-6 | 3.070 | 949 |
| A-3 | 3.180 | 941 | B-7 | 2.850 | 949 |
| A-4 | 3.300 | 941 | B-8 | 1.890 | 949 |
| A-5 | 3.440 | 941 | | | |
| A-6 | 3.310 | 941 | | | |
| A-7 | 3.000 | 941 | | | |
| A-8 | 3.570 | 949 | | | |
| B-1 | 3.400 | 949 | | | |
| B-2 | 3.210 | 949 | | | |
| B-3 | 3.140 | 949 | | | |
| B-4 | 3.000 | 949 | | | |

| | | | |
|---|---|---|---|
| Duct Area: | 201.1 | (A) | sq. inches |
| Barometric Pressure: | 29.89 | (Pbar) | inches Hg |
| Static Pressure: | 6.10 | (PG) | inches H2O |
| Pitot Tube Coefficient: | 0.84 | (Cp) | |
| Percent O2: | 8.6 | % O2 | |
| Percent CO2: | 11.5 | % CO2 | |
| Percent Nitrogen: | 79.9 | % N2 | |
| Percent Moisture: | 12.4 | $\%H_20$ | |
| Average Delta P: | 3.14 | | inches H2O |
| Root Mean Sq. Delta P: | 3.12 | (Pavg) | inches H2O |
| Mean Temperature: | 945.5 | (Ts) | Degrees F |
| Number Of Traverse Points: | 16 | | |

## CALCULATIONS

| | | | |
|---|---|---|---|
| DRY MOLE FRACTION OF STACK GAS: $Mfd = 1 - (\%H_2O / 100)$ | Mfd = | 0.876 | |
| ABSOLUTE STACK GAS PRESSURE: $Ps = Pbar + (Pg / 13.6)$ | Ps = | 30.34 | in. Hg |
| DRY MOLECULAR WEIGHT OF STACK GAS: $Md = 0.44 (\%CO_2) + 0.32 (\%O_2) + 0.28 (\%N_2)$ | Md = | 30.18 | lb/lb-mole |
| WET MOLECULAR WEIGHT OF STACK GAS: $Ms = (Md)(Mfd) + 0.18 (\%H_2O)$ | Ms = | 28.67 | lb/lb-mole |
| AVERAGE STACK GAS VELOCITY: $Vs = 85.49(Cp) X \{(Pavg)(Ts + 460)/[(Ps)(Ms)]\}^{0.5}$ | Vs = | 161.4 | ft/sec |
| DRY VOLUMETRIC FLOW RATE: $Qsd = 7.353(60)(Mfd)(Vs)(A)(Ps) / (Ts + 460)$ | Qsd = | 4,510 | DSCFM (DRY) |

# VOLUMETRIC FLOW RATE DETERMINATION

**Company:** Waste Management of Massachusetts
**Source:** WMI - Fitchburg Landfill
**Test Location:** Engine 3

**Conducted By:** GC/RC

**Load:** 1600 KW
**Run:** 2
**Start Time:** 3/18/2009 9:37
**End Time:** 3/18/2009 10:37

## TEST DATA

| Test Point | Delta P (in H2O) | Temp. (Deg F) | Test Point | Delta P (in H2O) | Temp. (Deg F) |
|---|---|---|---|---|---|
| A-1 | 3.260 | 951 | B-5 | 3.660 | 949 |
| A-2 | 2.980 | 951 | B-6 | 3.810 | 949 |
| A-3 | 3.460 | 951 | B-7 | 3.640 | 949 |
| A-4 | 3.550 | 951 | B-8 | 2.900 | 949 |
| A-5 | 3.480 | 951 | | | |
| A-6 | 3.760 | 951 | | | |
| A-7 | 3.810 | 951 | | | |
| A-8 | 3.240 | 949 | | | |
| B-1 | 3.130 | 949 | | | |
| B-2 | 3.570 | 949 | | | |
| B-3 | 3.660 | 949 | | | |
| B-4 | 3.950 | 949 | | | |

| | | | |
|---|---|---|---|
| Duct Area: | 201.1 | (A) | sq. inches |
| Barometric Pressure: | 29.89 | (Pbar) | inches Hg |
| Static Pressure: | 6.00 | (PG) | inches H2O |
| Pitot Tube Coefficient: | 0.84 | (Cp) | |
| Percent O2: | 8.4 | % O2 | |
| Percent CO2: | 11.2 | % CO2 | |
| Percent Nitrogen: | 80.4 | % N2 | |
| Percent Moisture: | 12.6 | $\%H_2O$ | |
| Average Delta P: | 3.49 | | inches H2O |
| Root Mean Sq. Delta P: | 3.48 | (Pavg) | inches H2O |
| Mean Temperature: | 949.9 | (Ts) | Degrees F |
| Number Of Traverse Points: | 16 | | |

## CALCULATIONS

| | | | |
|---|---|---|---|
| DRY MOLE FRACTION OF STACK GAS: $Mfd = 1 - (\%H_2O / 100)$ | Mfd = | 0.874 | |
| ABSOLUTE STACK GAS PRESSURE: $Ps = Pbar + (Pg / 13.6)$ | Ps = | 30.33 | in. Hg |
| DRY MOLECULAR WEIGHT OF STACK GAS: $Md = 0.44 (\%CO_2) + 0.32 (\%O_2) + 0.28 (\%N_2)$ | Md = | 30.13 | lb/lb-mole |
| WET MOLECULAR WEIGHT OF STACK GAS: $Ms = (Md)(Mfd) + 0.18 (\%H_2O)$ | Ms = | 28.60 | lb/lb-mole |
| AVERAGE STACK GAS VELOCITY: $Vs = 85.49(Cp) X \{(Pavg)(Ts + 460)/[(Ps)(Ms)]\}^{0.5}$ | Vs = | 170.9 | ft/sec |
| DRY VOLUMETRIC FLOW RATE: $Qsd = 7.353(60)(Mfd)(Vs)(A)(Ps) / (Ts + 460)$ | Qsd = | 4,752 | DSCFM (DRY) |

# VOLUMETRIC FLOW RATE DETERMINATION

**Company:** Waste Management of Massachusetts
**Source:** WMI - Fitchburg Landfill
**Test Location:** Engine 3

**Conducted By:** GC/RC

**Load:** 1600 KW
**Run:** 3
**Start Time:** 3/18/2009 10:44
**End Time:** 3/18/2009 11:44

## TEST DATA

| Test Point | Delta P (in H2O) | Temp. (Deg F) | Test Point | Delta P (in H2O) | Temp. (Deg F) |
|---|---|---|---|---|---|
| A-1 | 3.270 | 941 | B-5 | 3.950 | 949 |
| A-2 | 3.340 | 941 | B-6 | 3.870 | 949 |
| A-3 | 3.080 | 941 | B-7 | 3.450 | 949 |
| A-4 | 3.250 | 941 | B-8 | 2.930 | 949 |
| A-5 | 3.330 | 941 | | | |
| A-6 | 3.420 | 941 | | | |
| A-7 | 3.550 | 941 | | | |
| A-8 | 2.980 | 949 | | | |
| B-1 | 3.470 | 949 | | | |
| B-2 | 3.670 | 949 | | | |
| B-3 | 3.750 | 949 | | | |
| B-4 | 4.050 | 949 | | | |

| | | | |
|---|---|---|---|
| Duct Area: | 201.1 | (A) | sq. inches |
| Barometric Pressure: | 29.89 | (Pbar) | inches Hg |
| Static Pressure: | 6.00 | (PG) | inches H2O |
| Pitot Tube Coefficient: | 0.84 | (Cp) | |
| Percent O2: | 8.3 | % O2 | |
| Percent CO2: | 11.2 | % CO2 | |
| Percent Nitrogen: | 80.5 | % N2 | |
| Percent Moisture: | 12.2 | $\%H_2O$ | |
| Average Delta P: | 3.46 | | inches H2O |
| Root Mean Sq. Delta P: | 3.45 | (Pavg) | inches H2O |
| Mean Temperature: | 945.5 | (Ts) | Degrees F |
| Number Of Traverse Points: | 16 | | |

## CALCULATIONS

| | | | |
|---|---|---|---|
| DRY MOLE FRACTION OF STACK GAS: $Mfd = 1 - (\%H_2O / 100)$ | Mfd = | 0.878 | |
| ABSOLUTE STACK GAS PRESSURE: Ps = Pbar + (Pg / 13.6) | Ps = | 30.33 | in. Hg |
| DRY MOLECULAR WEIGHT OF STACK GAS: $Md = 0.44 (\%CO_2) + 0.32 (\%O_2) + 0.28 (\%N_2)$ | Md = | 30.12 | lb/lb-mole |
| WET MOLECULAR WEIGHT OF STACK GAS: $Ms = (Md)(Mfd) + 0.18 (\%H_2O)$ | Ms = | 28.64 | lb/lb-mole |
| AVERAGE STACK GAS VELOCITY: $Vs = 85.49(Cp) X \{(Pavg)(Ts + 460)/[(Ps)(Ms)]\}^{0.5}$ | Vs = | 169.7 | ft/sec |
| DRY VOLUMETRIC FLOW RATE: Qsd = 7.353(60)(Mfd)(Vs)(A)(Ps) / (Ts + 460) | Qsd = | 4,754 | DSCFM (DRY) |

## APPENDIX C. TEST QA/ QC FORMS

Calibration Gas Certificates of Analysis

Example Calculations

Meterbox Calibrations

Pitot Calibrations

# PreTest Meterbox Audit

**Plant:** Waste Management of Massachusetts
**Location:** Fitchburg/Westminster Landfill

**Test Date:** 03/18/09
**Auditor:** RC/GC
**Project #:** 2009-15096

| | | | |
|---|---|---|---|
| **Meterbox I.D.:** | 1 | **Level Manometer:** | Yes |
| **Gamma:** | 0.983 | **Zero Manometer:** | Yes |
| **Delta H@** | 1.890 | **Barometric Pressure:** | 29.89 |

| | Audit Time | Dry Gas Meter | |
|---|---|---|---|
| | (Min) | Reading ($Ft^3$) | Temperature ($^oF$) |
| Initial Readings = | 0.0 | 306.516 | 72 |
| Final Readings = | 10.0 | 314.002 | 74 |

| | |
|---|---|
| Run Time (Minutes) **Theta** = | 10 |
| Gas Volume Sampled $V_m$ = | 7.4860 |
| Average $T_m$ = | 73.0 |

| | Audit Gamma Limits |
|---|---|
| Lower Gamma Limit **LGL**= | *0.96 * Y =* 0.944 |
| Upper Gamma Limit **UGL**= | *1.04 * Y =* 1.022 |

| | |
|---|---|
| Audit Gamma $Y_c$ = | **1.0071** |
| **Meter Box Audit =** | **Passed** |

*Ideal Sampling Rate = 0.75*

$$Y_c = (Theta / V_m) * [\{(29.92 / (460 + 68) * 0.75^2) * (T_m + 460)\} / P_{bar}]^{0.5}$$

*Passed = LGL < $Y_c$ < UGL*

*Failed = LGL > $Y_c$ or $Y_c$ > UGL*

Audit Performed By: R GC [illegible]

**RMC Environmental, Inc.**

# Cyclonic Flow Check

**Source Name:** Fitchburg Westminster Sanitary Landfill
**City, State:** Westminstar, MA
**Sampling Location:** Engine Stack/Duct #3

**Date:** 3/18/2009
**Calc By:** RC
**Project Number:** 2009-15096

**Check List**

Perform Pitot tube Inspection: Yes

Level and Zero Manometer: Yes

**Data Summary**

| | Pt No. | Angle | | Pt No. | % of Dia. | |
|---|---|---|---|---|---|---|
| **Traverse Points** | 1 | 4 | | 13 | 1 | |
| | 2 | 2 | | 14 | 2 | |
| | 3 | 3 | | 15 | 2 | |
| | 4 | 4 | | 16 | 3 | |
| | 5 | 2 | | 17 | | |
| | 6 | 2 | | 18 | | |
| | 7 | 1 | | 19 | | |
| | 8 | 1 | | 20 | | |
| | 9 | 3 | | 21 | | |
| | 10 | 4 | | 22 | | |
| | 11 | 3 | | 23 | | |
| | 12 | 1 | | 24 | | |

**Results**

Average Angle: 4.75 Acceptable

CFR 40 Part 60; App A, Method 1 Section 2.4 Limit: 20

Conducted By: [illegible]
Date: 3/18/09

# NO2-NO CONVERSION EFFICIENCY

**RMCEInc-Air Monitoring Division**

Manufacture/ Model: TECO 42i-HL
Serial Number: 42iHL-ANSBPCC (Asset#205424)

Instrument Span: 250
Date Of Test: 03/08/2009

| RESULTS | |
|---|---|
| Peak response recorded during converter efficiency test: | 25.5 ppm |
| Response recorded at the end of the 30-minute test: | 25.02 ppm |
| Percent decrease from the peak response: | 1.88% |
| **CONVERTER EFFICIENCY:** | **98.12%** |

SPECIFICATIONS (EPA METHOD 20): RESPONSE AT 30 MINUTES MUST NOT DECREASE BY MORE THAN 2% OF THE PEAK RESPONSE VALUE.

## NO2-NO CONVERTER EFFICIENCY TEST PROCEDURES

RMCEInc-AMD followed the manufacturer's recommended set-up procedures contained in the analyzer manual. After the initial set-up procedures were completed, the electronics of the monitor were adjusted according to the manufacturer's guidelines. The monitor was then calibrated by flowing NO calibration gases into the instrument. A calibration gas was then diluted (1:1) with purified compressed air. The gas mixture was routed through a manifold into a Tedlar bag, which was previously leak tested and evacuated. This arrangement afforded sufficient volume to allow the sampling system to operate for the required 30 minutes. Immediately after the bag was filled, the manifold was connected to the sampling system. The system was turned on and the analyzer response was recorded on a data acquisition system. The one minute averages from the data acquisition system was analyzed for the peak response and the response at the end of the 30-minute sampling period.

# S-TYPE PITOT TUBE INSPECTION

| | | | |
|---|---|---|---|
| **Project Number** | 2009-15096 | | |
| **Pitot Tube Number** | M2-38-1 | | |
| | | | |
| Level | Y | (Y/N) | PASS |
| Obstructions | N | (Y/N) | PASS |
| Damaged | N | (Y/N) | PASS |
| Type of material | SS | | |
| | | | |
| -10 < alpha1 < +10 | 1.0 | Degrees | PASS |
| -10 < alpha2 < +10 | 1.0 | Degrees | PASS |
| -5 < Beta1 < +5 | 0.0 | Degrees | PASS |
| -5 < Beta2 < +5 | 0.0 | Degrees | PASS |
| z or Gamma | 0.0 | Degrees | |
| w or Theta | 0.5 | Degrees | |
| A | 0.795 | Inches | |
| {z = A Tan (Gamma)} < 0.125 | 0.004 | Inches | PASS |
| {w = A Tan (Theta)} < 0.03125 | 0.008 | Inches | PASS |
| $0.1875 < D_t < 0.375$ | 0.380 | Inches | FAIL |
| $1.05\ D_t < P_a < 1.5\ D_t$ | 0.400 | Inches | PASS |
| $1.05\ D_t < P_b < 1.5\ D_t$ | 0.400 | Inches | PASS |
| $\lvert P_a - P_b \rvert < 0.0625$ | 0.000 | Inches | PASS |
| Distance T/C set back > 2.0 | 2.000 | Inches | PASS |

| | |
|---|---|
| alpha1 & alpha 2 | are the angles of deflection that faces of the pitot tube are off from the perpendicular line of the traverse axis. |
| Beta1 & Beta2 | are the angles of deflection that faces of the pitot tube from the line parallel to the longitudinal tube axis. |
| Gamma | is the angle between the line between the two pitot tips and the theoretical level line between the tips. |
| Theta | is the angle between the two center lines of the pitot faces. |
| A | is the distance between the two pitot tips. |
| z | is the distance between the two lengths of the pitot tips. |
| w | is the distance between the two center lines of each of the pitot tubes. |
| $D_t$ | is the outside diameter of the tubing used. |
| $P_a$ & $P_b$ | is the distance between the pitot tube face and the longitudinal tube axis. |

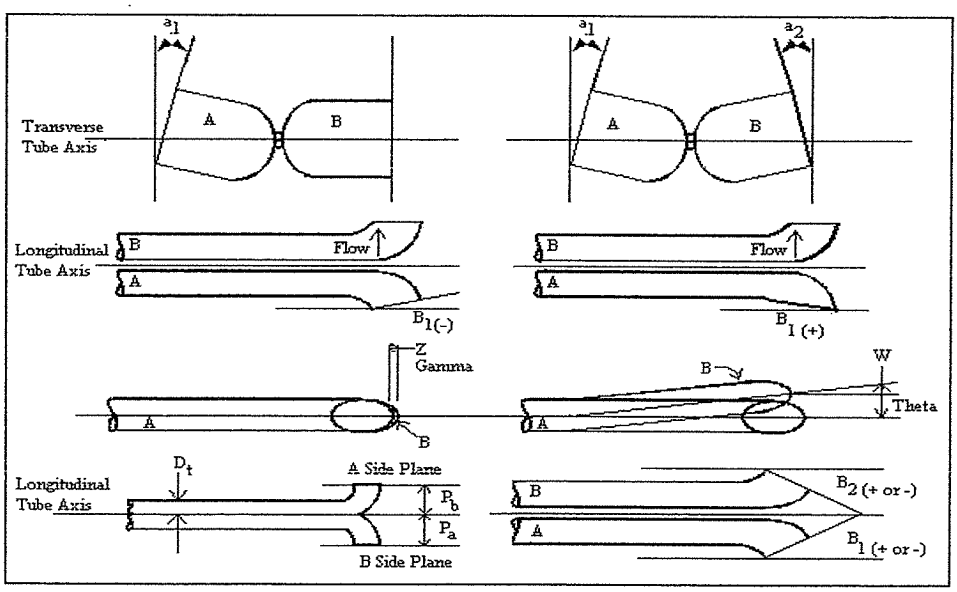


COMMENTS: _____

I certify that this pitot tube meets or exceeds all specifications, criteria and/ or applicable design features and is hereby assigned a pitot tube calibration factor of 0.84.

Signature: _____

Date: 3/18/09

RMC ENvironmental, Inc.

# EXAMPLE CALCULATIONS
## Instrumental Methods

**Company:** Waste Management, Inc.
**Source:** Engine #3
**Test Location:** Stack Exit
**RMCEInc Project #:** 2009-15096

**Normal Load:** MID LOAD
**Run:** 1
**Start Time:** 3/18/2009 8:30
**End Time:** 3/18/2009 9:30
**Run Duration (Min.) :** 1:00

**Emission Rate (lbs/mmBtu)**

$NO_x$lbs/mmbtu = F-Factor * Conv-Factor * NOxppmd * 20% O2 / (20.9% O2 -O2%d )

$NO_x$lbs/mmbtu = 61.96 * 9559.5 * 0.0000001194 * 20.9 / ( 20.9- 8.30 )

$NO_x$lbs/mmbtu = 0.117

**Emission Rate (ppm@15% $O_2$)**

$NO_x$ ppm@15% $O_2$ = NOx ppmd * 5.9 / (20.9% O2 -O2%d )

$NO_x$ ppm@15% $O_2$ = 542.85 * 5.9 / (20.9 - 8.30 )

$NO_x$ ppm@15% $O_2$ = 254.23

**Emission Rate (lbs/Hr)**

$NO_x$lbs/Hr = 60 * Conv-Factor * NOxppmd * "Flowrate

NOxlbs/Hr = 61.96 * 60 * 0.0000001194 * "Flowrate

$NO_x$lbs/Hr = 2.00

**Emission Rate (g/BHP-Hr)**

$NO_x$g/BHP-Hr = 453.593/(% Load *2233) * lb/Hr

NOxg/BHP-Hr = 2.0019052944 * 453.593 / 2233*0.99

$NO_x$g/BHP-Hr = 0.41

Airgas

Airgas Speciality Gases
[illegible] S. Wentworth Avenue
[illegible]
[illegible]
FAX [illegible]
http: www.airgas.com

# CERTIFICATE OF ANALYSIS
# Grade of Product: EPA Protocol

| | | | |
|---|---|---|---|
| Part Number: | E03NI61E15A2839 | Reference Number: | 54-124110957-2 |
| Cylinder Number: | SG9135827BAL | Cylinder Volume: | 158 Cu.Ft. |
| Laboratory: | ASG - Chicago - IL | Cylinder Pressure: | 2015 PSIG |
| Analysis Date | Oct 10, 2007 | Valve Outlet: | 590 |

**Expiration Date: Oct 10, 2010**

Certification performed in accordance with "EPA Traceability Protocol (Sept. 1997)" using the assay procedures listed. Analytical Methodology does not require correction for analytical interferences. This cylinder has a total analytical uncertainty as stated below with a confidence level of 95%. There are no significant impurities which affect the use of this calibration mixture. All concentrations are on a volume/volume basis unless otherwise noted.
Do Not Use This Cylinder below 150 psig.i.e. 1 Mega Pascal

## ANALYTICAL RESULTS

| Component | Requested Concentration | Actual Concentration | Protocol Method | Total Relative Uncertainity |
|---|---|---|---|---|
| CARBON DIOXIDE | 17.50 % | 17.24 % | G1 | +/- 1% NIST Traceable |
| OXYGEN | 20.90 % | 20.86 % | G1 | +/- 1% NIST Traceable |
| NITROGEN | Balance | | | |

## CALIBRATION STANDARDS

| Type | Lot ID | Cylinder No | Concentration | Expiration Date |
|---|---|---|---|---|
| NTRM | 60608 | CC206134 | 22.51% OXYGEN/NITROGEN | May 01, 2010 |
| NTRM | 101705 | SG9169340BAL | 17.89% CARBON DIOXIDE/ | May 01, 2010 |

## ANALYTICAL EQUIPMENT

| Instrument/Make/Model | Analytical Principle | Last Multipoint Calibration |
|---|---|---|
| HORIBA 510 | NDIR | Oct 09, 2007 |
| CAI-110 | Paramagnetic | Oct 09, 2007 |

**Triad Data Available Upon Request**

Notes:

QA Approval

Airgas

Airgas Speciality Gases
12722 S. Wentworth Avenue
Chicago, IL 60628
1-773-785-3000
FAX: 1-773-785-1928
www.airgas.com

# CERTIFICATE OF ANALYSIS
# Grade of Product: EPA Protocol

| | | | |
|---|---|---|---|
| Part Number: | E03NI77E15A1129 | Reference Number: | 54-124152570-10 |
| Cylinder Number: | SG9197290BAL | Cylinder Volume: | 152 Cu.Ft. |
| Laboratory: | ASG - Chicago - IL | Cylinder Pressure: | 2015 PSIG |
| Analysis Date: | Sep 25, 2008 | Valve Outlet: | 590 |

**Expiration Date: Sep 25, 2011**

Certification performed in accordance with "EPA Traceability Protocol (Sept. 1997)" using the assay procedures listed. Analytical Methodology does not require correction for analytical interferences. This cylinder has a total analytical uncertainty as stated below with a confidence level of 95%. There are no significant impurities which affect the use of this calibration mixture. All concentrations are on a volume/volume basis unless otherwise noted.
Do Not Use This Cylinder below 150 psig.i.e. 1 Mega Pascal

## ANALYTICAL RESULTS

| Component | Requested Concentration | Actual Concentration | Protocol Method | Total Relative Uncertainty |
|---|---|---|---|---|
| CARBON DIOXIDE | 11.00 % | 10.91 % | G1 | +/- 1% NIST Traceable |
| OXYGEN | 12.00 % | 12.00 % | G1 | +/- 1% NIST Traceable |
| NITROGEN | Balance | | | |

## CALIBRATION STANDARDS

| Type | Lot ID | Cylinder No | Concentration | Expiration Date |
|---|---|---|---|---|
| NTRM/CO2 | 080806 | SG9161059BAL | 15.862% CARBON DIOXIDE/ | May 01, 2010 |
| NTRM/O2 | 82658 | SG9168304BAL | 16.04% OXYGEN/ | Jan 01, 2010 |

## ANALYTICAL EQUIPMENT

| Instrument/Make/Model | Analytical Principle | Last Multipoint Calibration |
|---|---|---|
| HORIBA 510 | NDIR | Sep 08, 2008 |
| CAI-110 | Paramagnetic | Sep 08, 2008 |

**Triad Data Available Upon Request**

Notes:

**QA Approval**

Airgas

Airgas Speciality Gases
12722 S. Wentworth Avenue
Chicago, IL 60628
1-773-785-3000
FAX: 1-773-785-1928
www.airgas.com

# CERTIFICATE OF ANALYSIS
# Grade of Product: EPA Protocol

| | | | |
|---|---|---|---|
| Part Number: | E03NI99E15A0391 | Reference Number: | 54-124163365-2 |
| Cylinder Number: | CC208805 | Cylinder Volume: | 144 Cu.Ft. |
| Laboratory: | ASG - Chicago - IL | Cylinder Pressure: | 2015 PSIG |
| Analysis Date: | Jan 14, 2009 | Valve Outlet: | 660 |

**Expiration Date: Jan 14, 2011**

Certification performed in accordance with "EPA Traceability Protocol (Sept. 1997)" using the assay procedures listed. Analytical Methodology does not require correction for analytical interferences. This cylinder has a total analytical uncertainty as stated below with a confidence level of 95%. There are no significant impurities which affect the use of this calibration mixture. All concentrations are on a volume/volume basis unless otherwise noted.
Do Not Use This Cylinder below 150 psig.i.e. 1 Mega Pascal

## ANALYTICAL RESULTS

| Component | Requested Concentration | Actual Concentration | Protocol Method | Total Relative Uncertainty |
|---|---|---|---|---|
| NITRIC OXIDE | 250.0 PPM | 262.5 PPM | G1 | +/- 1% NIST Traceable |
| SULFUR DIOXIDE | 250.0 PPM | 249.8 PPM | G1 | +/- 1% NIST Traceable |
| NITROGEN | Balance | | | |
| Total oxides of nitrogen | | 262.6 PPM | | For Reference Only |

## CALIBRATION STANDARDS

| Type | Lot ID | Cylinder No | Concentration | Expiration Date |
|---|---|---|---|---|
| NTRM/NO | 60602 | CC208165 | 257.0PPM NITRIC OXIDE/NITROGEN | Jan 01, 2010 |
| NTRM/SO2 | 10509 | SG9138224BAL | 173.0PPM SULFUR DIOXIDE/ | May 01, 2011 |

## ANALYTICAL EQUIPMENT

| Instrument/Make/Model | Analytical Principle | Last Multipoint Calibration |
|---|---|---|
| Thermo 6700 | FTIR | Jan 07, 2009 |
| Thermo 6700 | FTIR | Jan 07, 2009 |

**Triad Data Available Upon Request**

Notes:

B. Bolin

**QA Approval**

**Airgas**

Airgas Speciality Gases
12722 S Wentworth Avenue
Chicago, IL 60628
1-773-785-0000
Fax: 1-773-785-1928
Web: www.airgas.com

# CERTIFICATE OF ANALYSIS
## Grade of Product: EPA Protocol

| | | | |
|---|---|---|---|
| Part Number: | E03NI99E15A0391 | Reference Number: | 54-124110794-6 |
| Cylinder Number: | CC45515 | Cylinder Volume: | 144 Cu.Ft |
| Laboratory: | ASG - Chicago - IL | Cylinder Pressure: | 2015 PSIG |
| Analysis Date: | Oct 18, 2007 | Valve Outlet: | 660 |

**Expiration Date: Oct 18, 2009**

Certification performed in accordance with "EPA Traceability Protocol (Sept. 1997)" using the assay procedures listed. Analytical Methodology does not require correction for analytical interferences. This cylinder has a total analytical uncertainty as stated below with a confidence level of 95%. There are no significant impurities which affect the use of this calibration mixture. All concentrations are on a volume/volume basis unless otherwise noted.
Do Not Use This Cylinder below 150 psig i.e. 1 Mega Pascal

### ANALYTICAL RESULTS

| Component | Requested Concentration | Actual Concentration | Protocol Method | Total Relative Uncertainity |
|---|---|---|---|---|
| NITRIC OXIDE | 250.0 PPM | 244.9 PPM | G1 | +/- 1% NIST Traceable |
| SULFUR DIOXIDE | 250.0 PPM | 251.0 PPM | G1 | +/- 1% NIST Traceable |
| NITROGEN | Balance | | | |
| Total oxides of nitrogen | | 245.300 PPM | | For Reference Only |

### CALIBRATION STANDARDS

| Type | Lot ID | Cylinder No | Concentration | Expiration Date |
|---|---|---|---|---|
| NTRM | 60611 | CC206178 | 475.0PPM SULFUR DIOXIDE/ | Sep 01, 2010 |
| NTRM | 60602 | CC208165 | 257.0PPM NITRIC OXIDE/NITROGEN | Feb 29, 2008 |

### ANALYTICAL EQUIPMENT

| Instrument/Make/Model | Analytical Principle | Last Multipoint Calibration |
|---|---|---|
| CAI Model 600 | Chemiluminescence | Oct 09, 2007 |
| HORIBA 510 | NDIR | Oct 09, 2007 |

Triad Data Available Upon Request

Notes:

Signature on file

QA Approval

Airgas

Airgas Speciality Gases
12722 S. Wentworth Avenue
Chicago, IL 60628
1-773-785-3000
FAX: 1-773-785-1928
http://www.airgas.com

# CERTIFICATE OF ANALYSIS
# Grade of Product: EPA Protocol

| | | | |
|---|---|---|---|
| Part Number: | E03NI99E15A01C4 | Reference Number: | 54-124095870-1 |
| Cylinder Number: | CC2635 | Cylinder Volume: | 144 Cu.Ft. |
| Laboratory: | ASG - Chicago, IL | Cylinder Pressure: | 2015 PSIG |
| Analysis Date: | May 21, 2007 | Valve Outlet: | 660 |

**Expiration Date: May 21, 2009**

Certification performed in accordance with "EPA Traceability Protocol (Sept. 1997)" using the assay procedures listed. Analytical Methodology does not require correction for analytical interferences. This cylinder has a total analytical uncertainty as stated below with a confidence level of 95%. There are no significant impurities which affect the use of this calibration mixture. All concentrations are on a volume/volume basis unless otherwise noted.
Do Not Use This Cylinder below 150 psig.i.e. 1 Mega Pascal

## ANALYTICAL RESULTS

| Component | Requested Concentration | Actual Concentration | Protocol Method | Total Relative Uncertainity |
|---|---|---|---|---|
| NITRIC OXIDE | 115.0 PPM | 115.39 PPM | G1 | +/- 1% NIST Traceable |
| SULFUR DIOXIDE | 115.0 PPM | 113.56 PPM | G1 | +/- 1% NIST Traceable |
| NITROGEN | Balance | | | |
| Total oxides of nitrogen | | 115.400 PPM | | For Reference Only |

## CALIBRATION STANDARDS

| Type | Lot ID | Cylinder No | Concentration | Expiration Date |
|---|---|---|---|---|
| NTRM | 60611 | CC206178 | 475.0PPM SULFUR DIOXIDE/ | Sep 01, 2010 |
| NTRM | 60602 | CC208165 | 257.0PPM NITRIC OXIDE/NITROGEN | Feb 29, 2008 |

## ANALYTICAL EQUIPMENT

| Instrument/Make/Model | Analytical Principle | Last Multipoint Calibration |
|---|---|---|
| Nicolet Nexus | FTIR | Apr 21, 2007 |
| Nicolet Nexus | FTIR | Apr 21, 2007 |

**Triad Data Available Upon Request**

Notes:

QA Approval

Airgas

Airgas Speciality Gases
12722 S. Wentworth Avenue
Chicago, IL 60628
1-773-785-3000
FAX: 1-773-785-1928
http://www.airgas.com

# CERTIFICATE OF ANALYSIS
# Grade of Product: EPA Protocol

| | | | |
|---|---|---|---|
| Part Number: | E03NI99E15A0370 | Reference Number: | 54-124102383-9 |
| Cylinder Number: | CC177161 | Cylinder Volume: | 144 Cu.Ft. |
| Laboratory: | ASG - Chicago - IL | Cylinder Pressure: | 2015 PSIG |
| Analysis Date: | Aug 09, 2007 | Valve Outlet: | 660 |

**Expiration Date: Aug 09, 2009**

Certification performed in accordance with "EPA Traceability Protocol (Sept. 1997)" using the assay procedures listed. Analytical Methodology does not require correction for analytical interferences. This cylinder has a total analytical uncertainty as stated below with a confidence level of 95%. There are no significant impurities which affect the use of this calibration mixture. All concentrations are on a volume/volume basis unless otherwise noted.
Do Not Use This Cylinder below 150 psig.i.e. 1 Mega Pascal

## ANALYTICAL RESULTS

| Component | Requested Concentration | Actual Concentration | Protocol Method | Total Relative Uncertainity |
|---|---|---|---|---|
| NITRIC OXIDE | 50.00 PPM | 51.330 PPM | G1 | +/- 1% NIST Traceable |
| SULFUR DIOXIDE | 50.00 PPM | 50.256 PPM | G1 | +/- 1% NIST Traceable |
| NITROGEN | Balance | | | |
| Total oxides of nitrogen | | 51.330 PPM | | For Reference Only |

## CALIBRATION STANDARDS

| Type | Lot ID | Cylinder No | Concentration | Expiration Date |
|---|---|---|---|---|
| NTRM | 11106 | CC207573 | 93.2PPM NITRIC OXIDE/ | Jan 01, 2010 |
| NTRM | 970501 | SG9198885BAL | 100.1PPM SULFUR DIOXIDE/ | Jul 01, 2009 |

## ANALYTICAL EQUIPMENT

| Instrument/Make/Model | Analytical Principle | Last Multipoint Calibration |
|---|---|---|
| Nicolet Nexus | FTIR | Jul 10, 2007 |
| Nicolet Nexus | FTIR | Jul 10, 2007 |

**Triad Data Available Upon Request**

Notes:

QA Approval

Airgas Specialty Gases
12722 S. Wentworth Avenue
Chicago, IL 60628
1-773-785-1[illegible]
Fax: 1-773-784-1[illegible]
www.airgas.com

# CERTIFICATE OF ANALYSIS

## Grade of Product: CERTIFIED STANDARD-SPEC

| | | | |
|---|---|---|---|
| Part Number: | X02AI99C80AC4W3 | Reference Number: | 54-124145911-1 |
| Cylinder Number: | LL40983@ | Cylinder Volume: | 85 Cu.Ft. |
| Laboratory: | ASG - Chicago - IL | Cylinder Pressure: | 2214 PSIG |
| Analysis Date: | Jul 23, 2008 | Valve Outlet: | 660 |

Product composition verified by direct comparison to calibration standards traceable to NIST ASTM Class 1 weights and/or NIST gas mixture reference materials.

## ANALYTICAL RESULTS

| Component | Requested Concentration | Actual Concentration | Analytical Uncertainty |
|---|---|---|---|
| NITROGEN DIOXIDE | 45.00 PPM | 44.92 PPM | +/- 5% |
| AIR | Balance | | |

Notes:

QA Approval

Airgas

# CERTIFICATE OF ANALYSIS
# Grade of Product: EPA Protocol

Airgas Specialty Gases
6421 Monclova Road
Maumee, OH 43537-9760
(419) 893-7226
FAX: (419) 893-2963
www.airgas.com

| | | | |
|---|---|---|---|
| Part Number: | E02NI99E15A0080 | Reference Number: | 113-124136020-8 |
| Cylinder Number: | CC10309 | Cylinder Volume: | 144 Cu.Ft. |
| Laboratory: | ASG - Maumee - OH | Cylinder Pressure: | 2015 PSIG |
| Analysis Date: | May 08, 2008 | Valve Outlet: | 350 |

**Expiration Date: May 08, 2011**

Certification performed in accordance with "EPA Traceability Protocol (Sept. 1997)" using the assay procedures listed. Analytical Methodology does not require correction for analytical interferences. This cylinder has a total analytical uncertainty as stated below with a confidence level of 95%. There are no significant impurities which affect the use of this calibration mixture. All concentrations are on a volume/volume basis unless otherwise noted.
Do Not Use This Cylinder below 150 psig.i.e. 1 Mega Pascal

## ANALYTICAL RESULTS

| Component | Requested Concentration | Actual Concentration | Protocol Method | Total Relative Uncertainity |
|---|---|---|---|---|
| CARBON MONOXIDE | 250.0 PPM | 255.8 PPM | G1 | +/- 1% NIST Traceable |
| NITROGEN | Balance | | | |

## CALIBRATION STANDARDS

| Type | Lot ID | Cylinder No | Concentration | Expiration Date |
|---|---|---|---|---|
| NTRM | 051204 | CC180009 | 99.49PPM CARBON MONOXIDE/NITROGEN | Feb 02, 2009 |
| NTRM | 051205 | CC180694 | 495.8PPM CARBON MONOXIDE/NITROGEN | Feb 02, 2009 |

## ANALYTICAL EQUIPMENT

| Instrument/Make/Model | Analytical Principle | Last Multipoint Calibration |
|---|---|---|
| 022-Horiba VIA-510 | NDIR | Apr 16, 2008 |

Triad Data Available Upon Request

Notes:

Ray Yoder

QA Approval

Airgas

Airgas Speciality Gases
12722 S. Wentworth Avenue
Chicago, IL 60628
1-773-785-3000
FAX: 1-773-785-1928
http: /www.airgas.com

# CERTIFICATE OF ANALYSIS
# Grade of Product: EPA Protocol

| | | | |
|---|---|---|---|
| Part Number: | E02NI99E15A0928 | Reference Number: | 54-124095935-3 |
| Cylinder Number: | CC107994 | Cylinder Volume: | 144 Cu.Ft. |
| Laboratory: | ASG - Chicago - IL | Cylinder Pressure: | 2015 PSIG |
| Analysis Date: | May 22, 2007 | Valve Outlet: | 350 |

**Expiration Date: May 22, 2010**

Certification performed in accordance with "EPA Traceability Protocol (Sept. 1997)" using the assay procedures listed. Analytical Methodology does not require correction for analytical interferences. This cylinder has a total analytical uncertainty as stated below with a confidence level of 95%. There are no significant impurities which affect the use of this calibration mixture. All concentrations are on a volume/volume basis unless otherwise noted.
Do Not Use This Cylinder below 150 psig.i.e. 1 Mega Pascal

## ANALYTICAL RESULTS

| Component | Requested Concentration | Actual Concentration | Protocol Method | Total Relative Uncertainity |
|---|---|---|---|---|
| CARBON MONOXIDE | 600.0 PPM | 596.75 PPM | G1 | +/- 1% NIST Traceable |
| NITROGEN | Balance | | | |

## CALIBRATION STANDARDS

| Type | Lot ID | Cylinder No | Concentration | Expiration Date |
|---|---|---|---|---|
| NTRM | 52403 | SG9159628BAL | 973.6PPM CARBON MONOXIDE/ | Jun 01, 2009 |
| NTRM | 524 | SG9183217BAL | 973.6PPM CARBON MONOXIDE/NITROGEN | Jun 01, 2009 |

## ANALYTICAL EQUIPMENT

| Instrument/Make/Model | Analytical Principle | Last Multipoint Calibration |
|---|---|---|
| Nicolet Nexus | FTIR | May 18, 2007 |

**Triad Data Available Upon Request**

Notes:

**QA Approval**

**Airgas**

# CERTIFICATE OF ANALYSIS
# Grade of Product: EPA Protocol

Airgas Speciality Gases
[illegible] S. Normandie Avenue
Chicago, IL 60628
1-773-[illegible]
FAX: 1-773-[illegible]
Web: www.airgas.com

| | | | |
|---|---|---|---|
| Part Number: | E02NI99E15A0502 | Reference Number: | 54-124088957-16 |
| Cylinder Number: | XC026080B | Cylinder Volume: | 144 Cu.Ft. |
| Laboratory: | ASG - Chicago - IL | Cylinder Pressure: | 2015 PSIG |
| Analysis Date: | Mar 14, 2007 | Valve Outlet: | 350 |

**Expiration Date: Mar 14, 2010**

Certification performed in accordance with "EPA Traceability Protocol (Sept. 1997)" using the assay procedures listed. Analytical Methodology does not require correction for analytical interferences. This cylinder has a total analytical uncertainty as stated below with a confidence level of 95%. There are no significant impurities which affect the use of this calibration mixture. All concentrations are on a volume/volume basis unless otherwise noted.
Do Not Use This Cylinder below 150 psig.i.e. 1 Mega Pascal

## ANALYTICAL RESULTS

| Component | Requested Concentration | Actual Concentration | Protocol Method | Total Relative Uncertainity |
|---|---|---|---|---|
| CARBON MONOXIDE | 900.0 PPM | 898.9 PPM | G1 | +/- 1% NIST Traceable |
| NITROGEN | Balance | | | |

## CALIBRATION STANDARDS

| Type | Lot ID | Cylinder No | Concentration | Expiration Date |
|---|---|---|---|---|
| NTRM | 52403 | SG9159628BAL | 973.6PPM CARBON MONOXIDE/ | Jun 01, 2009 |

## ANALYTICAL EQUIPMENT

| Instrument/Make/Model | Analytical Principle | Last Multipoint Calibration |
|---|---|---|
| HORIBA 510 | NDIR | Feb 28 2007 |

Triad Data Available Upon Request

Notes.

QA Approval

Airgas

Airgas Speciality Gases
12722 S. Wentworth Avenue
Chicago, IL 60628
1-773-785-3000
FAX: 1-773-785-1928
www.airgas.com

# CERTIFICATE OF ANALYSIS
## Grade of Product: EPA Protocol

| | | | |
|---|---|---|---|
| Part Number: | E02NI99E15A0681 | Reference Number: | 54-124152570-4 |
| Cylinder Number: | CC183604 | Cylinder Volume: | 144 Cu.Ft. |
| Laboratory: | ASG - Chicago - IL | Cylinder Pressure: | 2015 PSIG |
| Analysis Date: | Sep 19, 2008 | Valve Outlet: | 660 |

**Expiration Date: Sep 19, 2011**

Certification performed in accordance with "EPA Traceability Protocol (Sept. 1997)" using the assay procedures listed. Analytical Methodology does not require correction for analytical interferences. This cylinder has a total analytical uncertainty as stated below with a confidence level of 95%. There are no significant impurities which affect the use of this calibration mixture. All concentrations are on a volume/volume basis unless otherwise noted.
Do Not Use This Cylinder below 150 psig.i.e. 1 Mega Pascal

### ANALYTICAL RESULTS

| Component | Requested Concentration | Actual Concentration | Protocol Method | Total Relative Uncertainty |
|---|---|---|---|---|
| PROPANE | 300.0 PPM | 294.8 PPM | G1 | +/- 1% NIST Traceable |
| NITROGEN | Balance | | | |

### CALIBRATION STANDARDS

| Type | Lot ID | Cylinder No | Concentration | Expiration Date |
|---|---|---|---|---|
| NTRM/C3H8 | 51919 | SG9101963ALB | 483.6PPM PROPANE/ | Jul 01, 2009 |

### ANALYTICAL EQUIPMENT

| Instrument/Make/Model | Analytical Principle | Last Multipoint Calibration |
|---|---|---|
| Nicolet Nexus | FTIR | Sep 08, 2008 |

**Triad Data Available Upon Request**

Notes:

Curt Stewart

**QA Approval**

Airgas

Airgas Speciality Gases
12722 S. Wentworth Avenue
Chicago, IL 60628
1-773-785-3000
FAX: 1-773-785-1928
www.airgas.com

# CERTIFICATE OF ANALYSIS
# Grade of Product: EPA Protocol

| | | | |
|---|---|---|---|
| Part Number: | E02NI99E15A0932 | Reference Number: | 54-124152570-9 |
| Cylinder Number: | CC200450 | Cylinder Volume: | 144 Cu.Ft. |
| Laboratory: | ASG - Chicago - IL | Cylinder Pressure: | 2015 PSIG |
| Analysis Date: | Sep 19, 2008 | Valve Outlet: | 350 |

**Expiration Date: Sep 19, 2011**

Certification performed in accordance with "EPA Traceability Protocol (Sept. 1997)" using the assay procedures listed. Analytical Methodology does not require correction for analytical interferences. This cylinder has a total analytical uncertainty as stated below with a confidence level of 95%. There are no significant impurities which affect the use of this calibration mixture. All concentrations are on a volume/volume basis unless otherwise noted.
Do Not Use This Cylinder below 150 psig.i.e. 1 Mega Pascal

## ANALYTICAL RESULTS

| Component | Requested Concentration | Actual Concentration | Protocol Method | Total Relative Uncertainty |
|---|---|---|---|---|
| PROPANE | 500.0 PPM | 501.7 PPM | G1 | +/- 1% NIST Traceable |
| NITROGEN | Balance | | | |

## CALIBRATION STANDARDS

| Type | Lot ID | Cylinder No | Concentration | Expiration Date |
|---|---|---|---|---|
| NTRM/C3H8 | 51919 | SG9101963ALB | 483.6PPM PROPANE/ | Jul 01, 2009 |

## ANALYTICAL EQUIPMENT

| Instrument/Make/Model | Analytical Principle | Last Multipoint Calibration |
|---|---|---|
| Nicolet Nexus | FTIR | Sep 08, 2008 |

**Triad Data Available Upon Request**

Notes:

Curt Stewart

**QA Approval**

Airgas

Airgas Speciality Gases
12722 S. Wentworth Avenue
Chicago, IL 60628
1-773-785-3000
FAX: 1-773-785-1928
www.airgas.com

# CERTIFICATE OF ANALYSIS
# Grade of Product: EPA Protocol

| | | | |
|---|---|---|---|
| Part Number: | E02NI99E15A0477 | Reference Number: | 54-124152570-1 |
| Cylinder Number: | XC029562B | Cylinder Volume: | 144 Cu.Ft. |
| Laboratory: | ASG - Chicago - IL | Cylinder Pressure: | 2015 PSIG |
| Analysis Date: | Sep 19, 2008 | Valve Outlet: | 350 |

**Expiration Date: Sep 19, 2011**

Certification performed in accordance with "EPA Traceability Protocol (Sept. 1997)" using the assay procedures listed. Analytical Methodology does not require correction for analytical interferences. This cylinder has a total analytical uncertainty as stated below with a confidence level of 95%. There are no significant impurities which affect the use of this calibration mixture. All concentrations are on a volume/volume basis unless otherwise noted.
Do Not Use This Cylinder below 150 psig.i.e. 1 Mega Pascal

## ANALYTICAL RESULTS

| Component | Requested Concentration | Actual Concentration | Protocol Method | Total Relative Uncertainty |
|---|---|---|---|---|
| PROPANE | 850.0 PPM | 842.1 PPM | G1 | +/- 1% NIST Traceable |
| NITROGEN | Balance | | | |

## CALIBRATION STANDARDS

| Type | Lot ID | Cylinder No | Concentration | Expiration Date |
|---|---|---|---|---|
| NTRM | 010506 | SG9133675 | 965.6PPM PROPANE/ | May 01, 2012 |

## ANALYTICAL EQUIPMENT

| Instrument/Make/Model | Analytical Principle | Last Multipoint Calibration |
|---|---|---|
| Nicolet Nexus | FTIR | Sep 08, 2008 |

**Triad Data Available Upon Request**

Notes:

Curt Stewart

**QA Approval**

## APPENDIX D. PROCESS DATA

**PROCESS DATA**

**Company:** Waste Management - Fitchburg
**Source:** Engine 3 - High Only

*Calculated Data*

| Start Time | | % Load | KW | Fuel Flow | Air Flow | BTU | Tuning | Air/Fuel Ratio | Fuel Position | Throttle Position | CH4 % | O2 % | CO2 % | N2 % | ENGINE # |
|---|---|---|---|---|---|---|---|---|---|---|---|---|---|---|---|
| 3/18/2009 8:30 | Run 1 | 100 | 1628 | 541 | 4389 | 473 | 28.0 | 8.1 | 56 | 52 | 52.0 | 0.57 | 39.9 | 7.5 | 3 |
| 3/18/2009 8:45 | | 100 | 1617 | 540 | 4368 | 473 | | | | | | | | | 3 |
| 3/18/2009 9:00 | | 100 | 1634 | 539 | 4407 | 473 | | | | | | | | | 3 |
| 3/18/2009 9:15 | | 100 | 1614 | 535 | 4395 | 473 | | | | | | | | | 3 |
| | Average | 100 | 1623 | 539 | 4390 | 473 | | | | | | | | | |
| 3/18/2009 9:38 | Run 2 | 100 | 1602 | 540 | 4391 | 473 | 28.0 | 8.2 | 57 | 51 | 52.1 | 0.55 | 39.9 | 7.4 | 3 |
| 3/18/2009 9:53 | | 100 | 1616 | 536 | 4374 | 473 | | | | | | | | | 3 |
| 3/18/2009 10:08 | | 100 | 1655 | 540 | 4399 | 473 | | | | | | | | | 3 |
| 3/18/2009 10:23 | | 100 | 1607 | 538 | 4394 | 473 | | | | | | | | | 3 |
| | Average | 100 | 1620 | 539 | 4390 | 473 | | | | | | | | | |
| 3/18/2009 10:45 | Run 3 | 96 | 1612 | 538 | 4385 | 473 | 28.0 | 8.2 | 56 | 52 | 52.3 | 0.50 | 40.0 | 7.1 | 3 |
| 3/18/2009 11:00 | | 96 | 1626 | 538 | 4381 | 473 | | | | | | | | | 3 |
| 3/18/2009 11:15 | | 96 | 1605 | 536 | 4382 | 473 | | | | | | | | | 3 |
| 3/18/2009 11:30 | | 96 | 1621 | 540 | 4369 | 473 | | | | | | | | | 3 |
| | Average | 96 | 1616 | 538 | 4379 | 473 | | | | | | | | | |

8210 Mosley Rd.
Houston, TX 77075
713 943-9776 Telephone
713 943-3846 Facsimile

# CORE LABORATORIES

RACHEL CHLEBOROWICZ
RMC ENVIRONMENTAL INC
9226 N 2ND STREET
MACHESNEY PARK IL 61115

| | |
|---|---|
| Sample Number: | 190929-001 |
| Sample Date: | 3/18/2009 8:45:00 AM |
| Date Reported: | 3/20/2009 |
| Date Received: | 3/20/2009 |
| Sample ID: | Project Number 2009-15096 |
| Description: | E3-01 |
| | LFG Fuel |

## Analytical Report

| Test | Result | Units | Method | Date | Analyst |
|---|---|---|---|---|---|
| **Natural Gas Analysis** | | | | | |
| Hydrogen | 0.08 | Mol % | GP2261ASTM1945 | 3/20/2009 | JAT |
| Oxygen | 0.27 | Mol % | | | |
| Nitrogen | 9.57 | Mol % | | | |
| Carbon Dioxide | 39.06 | Mol % | | | |
| Methane | 51.00 | Mol % | | | |
| Ethane | < 0.01 | Mol % | | | |
| Propane | < 0.01 | Mol % | | | |
| Isobutane | < 0.01 | Mol % | | | |
| n-Butane | < 0.01 | Mol % | | | |
| Isopentane | < 0.01 | Mol % | | | |
| n-Pentane | < 0.01 | Mol % | | | |
| Hexanes Plus | 0.02 | Mol % | | | |
| Total | 100.00 | Mol % | | | |
| Molar Mass Ratio | 0.97236 | | GP2172ASTM3588 | | |
| Relative Density | 0.97451 | | | | |
| Compressibility Factor | 0.99712 | | | | |
| Gross Heating Value (Dry) | 516.4 | BTU/CF (Ideal | | | |
| Gross Heating Value (Dry) | 517.9 | BTU/CF (Real | | | |
| Net Heating Value (Dry) | 465.0 | BTU/CF (Ideal | | | |
| Net Heating Value (Dry) | 466.3 | BTU/CF (Real | | | |
| Pressure Base | 14.696 | psia | | | |
| F factor @ 20C & 29.92in. | 9523 | dscf/mmBTU | | | |

**Approved By:** _____
M. Jean Waits
Supervising Chemist

The analytical results, opinions or interpretations contained in this report are based upon information and material supplied by the client for whose exclusive and confidential use this report has been made. The analytical results, opinions or interpretations expressed represent the best judgment of Core Laboratories. Core Laboratories, however, makes no warranty or representation, express or implied, of any type, and expressly disclaims same as to the productivity, proper operations or profitableness of any oil, gas, coal, or other mineral, property, well or sand in connection with which such report is used or relied upon for any reason whatsoever. This report shall not be reproduced, in whole or in part, without the written approval of Core Laboratories.

8210 Mosley Rd.
Houston, TX 77075
713 943-9776 Telephone
713 943-3846 Facsimile

# CORE LABORATORIES

RACHEL CHLEBOROWICZ
RMC ENVIRONMENTAL INC
9226 N 2ND STREET
MACHESNEY PARK IL 61115

| | |
|---|---|
| Sample Number: | 190929-002 |
| Sample Date: | 3/18/2009 11:45:00 AM |
| Date Reported: | 3/20/2009 |
| Date Received: | 3/20/2009 |
| Sample ID: | Project Number 2009-15096 |
| Description: | E3-02 |
| | LFG Fuel |

## Analytical Report

| Test | Result | Units | Method | Date | Analyst |
|---|---|---|---|---|---|
| **Natural Gas Analysis** | | | | | |
| Hydrogen | 0.10 | Mol % | GP2261ASTM1945 | 3/20/2009 | JAT |
| Oxygen | 0.47 | Mol % | | | |
| Nitrogen | 8.95 | Mol % | | | |
| Carbon Dioxide | 39.27 | Mol % | | | |
| Methane | 51.20 | Mol % | | | |
| Ethane | < 0.01 | Mol % | | | |
| Propane | < 0.01 | Mol % | | | |
| Isobutane | < 0.01 | Mol % | | | |
| n-Butane | < 0.01 | Mol % | | | |
| Isopentane | < 0.01 | Mol % | | | |
| n-Pentane | < 0.01 | Mol % | | | |
| Hexanes Plus | 0.01 | Mol % | | | |
| Total | 100.00 | Mol % | | | |
| Molar Mass Ratio | 0.97257 | | GP2172ASTM3588 | | |
| Relative Density | 0.97473 | | | | |
| Compressibility Factor | 0.99711 | | | | |
| Gross Heating Value (Dry) | 518.0 | BTU/CF (Ideal | | | |
| Gross Heating Value (Dry) | 519.5 | BTU/CF (Real | | | |
| Net Heating Value (Dry) | 466.4 | BTU/CF (Ideal | | | |
| Net Heating Value (Dry) | 467.7 | BTU/CF (Real | | | |
| Pressure Base | 14.696 | psia | | | |
| F factor @ 20C & 29.92in. | 9496 | dscf/mmBTU | | | |

**Approved By:**

M. Jean Waits
Supervising Chemist

The analytical results, opinions or interpretations contained in this report are based upon information and material supplied by the client for whose exclusive and confidential use this report has been made. The analytical results, opinions or interpretations expressed represent the best judgment of Core Laboratories. Core Laboratories, however, makes no warranty or representation, express or implied, of any type, and expressly disclaims same as to the productivity, proper operations or profitableness of any oil, gas, coal, or other mineral, property, well or sand in connection with which such report is used or relied upon for any reason whatsoever. This report shall not be reproduced, in whole or in part, without the written approval of Core Laboratories.

# CORE LABORATORIES

Core Lab
RESERVOIR OPTIMIZATION
8210 Mosley Road
Houston, Texas 77075
Phone: 713-943-9776
Fax: 713-943-3846

No. 24829

# CHAIN OF CUSTODY RECORD

| CUSTOMER INFORMATION | PROJECT INFORMATION |
|---|---|
| COMPANY: RMC Environmental, Inc. | PROJECT NAME/NUMBER: 2009-15096 |
| SEND REPORT TO: R. Chleborowicz | BILLING INFORMATION |
| ADDRESS: 9226 N. 2nd St. | BILL TO: RMC Enviro Inc |
| Machesney Pk, IL 61115 | ADDRESS: PO Box 2131 |
| | Atlantic Beach, NC 28512 |
| PHONE: 815-378-6150 | PHONE: |
| FAX: 815-425-1102 | FAX: PO NO.: |

LAB JOB NO.:

| SAMPLE NO. | SAMPLE DESCRIPTION | SAMPLE DATE | SAMPLE TIME | SAMPLE MATRIX | CONTAINER | PRESERV. | NUMBER OF CONTAINERS | ANALYSIS / METHOD REQUEST: Fuel Analysis - ✓ F-Gas | REMARKS / PRECAUTIONS |
|---|---|---|---|---|---|---|---|---|---|
| E3-01 | LFG Fum Fuel | 3/18/09 | 8:45A | LFG | 1821 | | 1 | ✓ | |
| 02 | LFG Fum Fuel | " | 1145 | LFG | 1487 | | 1 | ✓ | |

SAMPLER: R. Chleborowicz

SHIPMENT METHOD: Fedex

AIRBILL NO.:

REQUIRED TURNAROUND:* ☐ SAME DAY ☐ 24 HOURS ☐ 48 HOURS ☐ 72 HOURS ☐ 5 DAYS ☐ 10 DAYS ☑ ROUTINE OTHER

| 1. RELINQUISHED BY: | DATE | 2. RELINQUISHED BY: | DATE | 3. RELINQUISHED BY: | DATE |
|---|---|---|---|---|---|
| SIGNATURE: | 3/18/09 | SIGNATURE: | | SIGNATURE: | |
| PRINTED NAME/COMPANY: R. Chleborowicz / RMC Enviro Inc | TIME 1150A | PRINTED NAME/COMPANY: | TIME | PRINTED NAME/COMPANY: | TIME |
| 1. RECEIVED BY: | DATE | 2. RECEIVED BY: | DATE | 3. RECEIVED BY: | DATE |
| SIGNATURE: | 3-2009 | SIGNATURE: | | SIGNATURE: | |
| PRINTED NAME/COMPANY: | TIME 1-24 | PRINTED NAME/COMPANY: | TIME | PRINTED NAME/COMPANY: | TIME |

ORIGINAL

*SUBJECT TO CHANGE AND REQUIRE SURCHARGE

COMMONWEALTH OF MASSACHUSETTS
EXECUTIVE OFFICE OF ENERGY & ENVIRONMENTAL AFFAIRS
DEPARTMENT OF ENVIRONMENTAL PROTECTION
**Central Regional Office**, 627 Main Street, Worcester, MA 01608

RECEIVED JAN 15 2009

DEVAL L. PATRICK
Governor

TIMOTHY P. MURRAY
Lieutenant Governor

IAN A. BOWLES
Secretary

LAURIE BURT
Commissioner

January 8, 2009

Resource Control, Inc
C/o Waste Management of Massachusetts
Fitchburg/Westminster Sanitary Landfill
4 Liberty Lane West
Hampton, NH 03842

Attention: Robert Magnusson,
Market Area Engineer

**Re: NMCPA Air Pollution Control Plan Approval Tr # X224236**
**Landfill Gas-to-Energy Facility to Operate Engines at Higher Heat Input Capacity**
**FMF # 133373 Classification: Operating Permit**

The Massachusetts Department of Environmental Protection ("MassDEP"), Bureau of Waste Prevention, Permitting Section, has reviewed the non-major comprehensive plan application for the proposed increase of energy input capacity rating for each engine generator set at the existing landfill gas to energy facility at the Fitchburg/Westminster Landfill, Route 31, Westminster, Massachusetts. The application was submitted under the seal and signature David E. Adams, P.E. Number 46417.

The application proposes to increase each landfill gas engine generator set rating from the currently approved 1400 KW to a rating of 1600 KW. The increase in rating will result in a minor increase in monthly emissions to the ambient air but will not result in an increase in emission rates per millions of Btu or in total "annual" emissions.

MassDEP has reviewed the application and is of the opinion that the material submitted is in conformance with the current Massachusetts Air Pollution Control Regulations and hereby APPROVES the request subject to the conditions and provisions stated herein.

This approval is for operation of the engine/gensets burning landfill gas at 1600Kw load capacity with associated emissions limits contained in the amended air quality plan approval Tr# W061954(A) dated January 13, 2006. All other terms and conditions contained in Tr# W061954(A) remain in effect unless specifically noted as a change herein.

This information is available in alternate format. Call Donald M. Gomes, ADA Coordinator at 617-556-1057 TDD# 866-539-7622 or 617-574-6868.
http://www.mass.gov/dep • Phone (508) 792-7650 • Fax (508) 792-7621
Printed on Recycled Paper

Paragraph "V **Emission Limits, B.** **Engines # 1 through # 4** **Table 3 ENGINE EMISSION LIMITS** is hereby replaced with the following:

**EU #1, #2, #3, and #4 shall not operated in a manner that causes emissions that exceed the emission limits noted in Table 3.**

| TABLE 3 - ENGINE EMISSION LIMITS | | | |
|---|---|---|---|
| **Pollutant** | **Lb/MMBtu** | **ton/month** | **Tons per rolling 12 month total per engine** |
| **PM** | **0.061** | **0.40** | **4.8** |
| **$SO_2$** | **0.066** | **0.44** | **5.3** |
| **NOx** | **0.166 (and 0.60 grams per brake horsepower hour.)** | **1.10** | **13.2** |
| **CO** | **0.830** | **5.50** | **66.0** |
| **NMOC** | **0.083** | **0.55** | **6.6** |
| **VOC** | **0.083** | **0.55** | **6.6** |

Appeal

This approval is an action of MassDEP. If you are aggrieved by this action, you may request an adjudicatory hearing. A request for a hearing must be made in writing and postmarked within twenty-one (21) days of the date of issuance of this Decision. Under 310 CMR 1.01(6)(b), the request must state clearly and concisely the facts which are the grounds for the request, and the relief sought. Additionally, the request must state why the Decision is not consistent with applicable laws and regulations. The hearing request along with a valid check payable to Commonwealth of Massachusetts in the amount of one hundred dollars ($100.00) must be mailed to: Commonwealth of Massachusetts, MassDEP of Environmental Protection, P.O. Box 4062, Boston, MA 02211.

The request will be dismissed if the filing fee is not paid, unless the appellant is exempt or granted a waiver as described below. The filing fee is not required if the appellant is a city or town (or municipal agency) county, or district of the Commonwealth of Massachusetts, or a municipal housing authority. MassDEP may waive the adjudicatory hearing-filing fee for a person who shows that paying the fee will create an undue financial hardship. A person seeking a waiver must file, together with the hearing request as provided above, an affidavit setting for the facts believed to support the claim of undue financial hardship.

If you have any questions please contact Gary Roscoe at 508-767-2773 at this office.

Yours truly,

Thomas P. Cusson

Thomas P. Cusson
Section Chief
Bureau of Air, Waste and Climate

tpc\gwr

ecc:Yi Tian, MassDEP, Boston