PERFORMANCE TESTING
September 2009

As Defined By The
Title 40 Code of Federal Regulations Part 60, 30 TAC 117.435 and 30 TAC 117.440 (k)

RMCEINC Project #2009-15930

WASTE MANAGEMENT OF TEXAS, INC.
DFW RECYCLING & DISPOSAL FACILITY
ENGINE PLANT
LEWSIVILLE, TEXAS

FOUR NEWLY INSTALLED CATERPILLAR 3520 INTERNAL COMBUSTION ENGINES

PREPARED FOR:
WASTE MANAGEMENT OF TEXAS, INC.
Waste Management Renewable Energy

BY:

RMC ENVIRONMENTAL, INC. – CHICAGO REGIONAL OFFICE

REPORT CERTIFICATION

The sampling, analysis, and data collection performed for this report were carried out under my direction and supervision, and I hereby certify that the test report is authentic and accurate, to the best of my knowledge.

Date 9/21/09

Signature

Rachel Chleborowicz, QSTI
Project Manager
RMC ENVIRONMENTAL, INC.

TABLE OF CONTENTS

1.0 PROJECT INFORMATION 1

1.1 Company Information 1
1.2 Testing Firm Information 1
1.3 Test Information 1

2.0 SOURCE IDENTIFICATION 1

3.0 SUMMARY AND DISCUSSION OF RESULTS 2

4.0 POLLUTANTS AND TEST METHODS 3

5.0 TEST PROCEDURES AND RESULTS 3

5.10 Sampling Procedures 3

6.0 EQUIPMENT CALIBRATION AND QUALITY ASSURANCE 6

APPENDIX A. TEST SUMMARY SHEETS

Emissions Summary

APPENDIX B. FIELD TEST DATA W/ INSTRUMENTAL TEST DATA

Method 1-4 Field Data
Flow Rate Determinations
Calibration Summaries
Instrumental Test Run Data
Reference Data Summary

APPENDIX C. TEST QA/ QC FORMS

Calibration Gas Certificates of Analysis
Meterbox Calibrations
Pitot Calibrations

APPENDIX D. PROCESS DATA

1.0 PROJECT INFORMATION

1.1 Company Information

Name and Address:	Waste Management of Texas, Inc. DFW Recycling & Disposal Facility (DFW RDF) 1600 A South Railroad Street Lewisville, Texas 75067
Contact:	Ms. Paula Carboni
Telephone Number:	972-459-1202
Source Tested:	Four newly installed IC Engines – Landfill Gas Treatment / Electric Generating Plant

1.2 Testing Firm Information

Name and Address:	RMC ENVIRONMENTAL, INC. 9226 North 2nd Street Machesney Park, Illinois 61115
Contact:	Rachel Chleborowicz
Telephone Number:	815-378-6150 Mobile 815-425-1102 Fax RMCE@AirMonitoring.com / RMCEInc@aol.com

1.3 Test Information

Test Requested By:	Waste Management, Inc. – Skyline RDF
Source Contact:	Mr. Peter Schultze
Telephone Number:	918-439-7829
Test Objective:	Title 40, Code of Federal Regulations, Part 60, Compliance and Performance Testing, Title V Permit testing & 30 TAC §§ 117.435, 440(k)
Test Methods:	EPA Methods 1-4, 3A, 7E and 10
Test Dates:	September 3rd, 2009
Source Test Coordinators:	Jim DiPaolo Waste Management, Inc.
Test Personnel:	Rachel Chleborowicz RMCEInc Andrew McDermand RMCEInc
Laboratory Analysis:	Core Laboratories

2.0 SOURCE IDENTIFICATION

Name and Address:	Waste Management of Texas, Inc. DFW Recycling & Disposal Facility (DFW RDF) 1600 A South Railroad Street Lewisville, Texas 75067
Contact:	Mr. Peter Schultze
Telephone Number:	918-439-7829
Source Tested:	Four IC Engines – Landfill Gas Treatment / Electric Generating Plant

Fuel:	Landfill Gas
Duct Dimensions:	Height 12' ID – ~16"
Sampling Location:	~ 60" Downstream and ~ 48" Upstream from any flow disturbance

- Senior Project Manager works directly with the site coordinator and the facility's operators during the testing to coordinate the testing. They are also responsible for operating and monitoring the instrumental test methods within the mobile test laboratory.
- The Site Coordinator is the facility's representative for the test program.

The individuals listed within above account for nearly 35 years of accumulative experience in the stack testing industry. Their experience expands nearly every state in the United States. It also includes most source categories such as aerospace facilities, waste incinerators, hazardous waste incinerators, trash incinerators, medical waste incinerators, crematories, cement kilns, paper mills, steel mills, combined cycle power plants, simple cycle power plants, coal fired power plants, Waste-to-energy facilities, natural gas compressor stations, diesel engines, ethanol plants, petro-chemical facilities and oil refineries.

3.0 SUMMARY AND DISCUSSION OF RESULTS

The compliance testing results for Waste Management of Texas, Inc. – DFW Recycling & Disposal Facility (DFW RDF) are shown in **Table 3-1**. The indicated pollutants are CO and NOx emissions in unit of the emission rate (lb/BHP-Hr). The reference test data are enclosed in **Appendices A & B** and the corresponding process data collected from the engine operations screen and the on-site Gas Chromatograph (GC) are included in **Appendix D**.

This data is an average of the three one-hour test runs conducted on each turbine. Each engine is rated for 2233 horsepower with ~1600 Kw of power produced. The testing was conducted at those levels.

TABLE 3-1. COMPLIANCE TEST RESULTS
September 3rd, 2009

Parameter	Result	Permit Limit
Engine #1 – 9/3/2009		
Engine #1 – NOx g/BHP-Hr NOx lb/Mw-Hr	0.40 1.23	0.6 g NOx / BHP-Hr 1.9 lb/Mw-Hr
Engine #1 – CO g/BHP-Hr	2.22	3.0 g CO / BHP-Hr
Engine #2 – 9/3/2009		
Engine #2 - NOx g/BHP-Hr NOx lb/Mw-Hr	0.38 1.15	0.6 g NOx / BHP-Hr 1.9 lb/Mw-Hr
Engine #2 - CO g/BHP-Hr	2.59	3.0 g CO / BHP-Hr
Engine #3 – 9/3/2009		
Engine #3 - NOx g/BHP-Hr NOx lb/Mw-Hr	0.44 1.33	0.6 g NOx / BHP-Hr 1.9 lb/Mw-Hr
Engine #3 - CO g/BHP-Hr	2.47	3.0 g CO / BHP-Hr
Engine #4 – 9/3/2009		
Engine #4 - NOx g/BHP-Hr NOx lb/Mw-Hr	0.44 1.34	0.6 g NOx / BHP-Hr 1.9 lb/Mw-Hr
Engine #4 - CO g/BHP-Hr	2.45	3.0 g CO / BHP-Hr

4.0 POLLUTANTS AND TEST METHODS

Pollutant Tested:	NO_x	EPA Method 7E – Title 40 CFR 60, Appendix A
	CO	EPA Method 10 – Title 40 CFR 60, Appendix A

5.0 TEST PROCEDURES AND RESULTS

5.10 Sampling Procedures

Testing was completed per EPA Test Methods 1, 2, 3A, 4, 7E and 10 defined in Title 40 CFR Part 60 Appendix A.

5.11 Volumetric Flow Rates

RMCEINC determined the number and location of the traverse points for volumetric flow rate measurement according to the procedures outlined in EPA Method 1. When determining the location and number of sample points, RMCEINC took into account the number of sample ports, duct configuration, and location of upstream and downstream flow disturbances. **Figures 5-1** is a diagram of the engine showing the exhaust to the silencer and the ports used for testing. **Figure 5-2** presents the EPA Method 1 data sheets illustrating the port locations and the points used for each Method 2 traverse.

The flue gas velocity and volumetric flow rate were determined according to the procedures of EPA Method 2. A Type S pitot tube with a Type K thermocouple was used to measure velocity pressure and stack gas temperature at each sample point. Each pitot tube conformed to the geometric specifications of EPA Method 2 and was assigned a coefficient of 0.84. An umbilical cord connected the pitot tube to the meter box inclined manometer and digital temperature readout. RMCEINC leak-checked the pitot tube prior to and after conducting the traverse.

RMCEINC determined the flue gas composition and molecular weight using EPA Methods 3A and 4 procedures.

Figure 5-1 – Engine Schematic / Diagram.

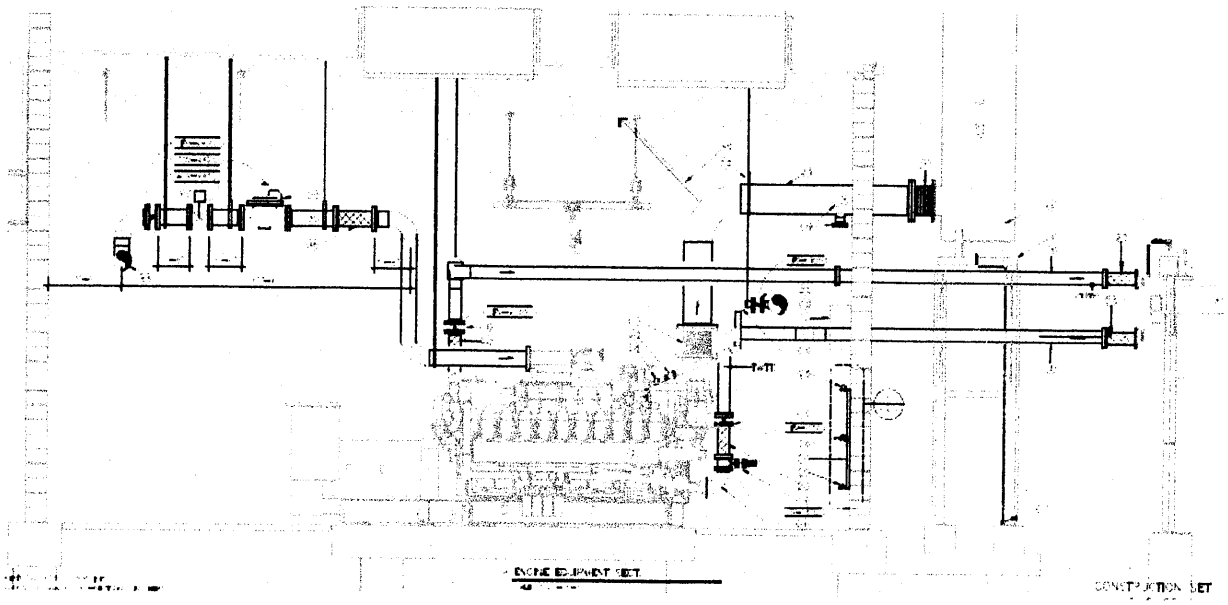

Figure 5-2 – EPA Method 1 Data – Engines 1-4

METHOD 1 - SAMPLE AND VELOCITY TRAVERSES FOR CIRCULAR SOURCES

Plant Name	WMI - DFW-RDF	**Date**	09/03/09
Sampling Location	Engines 1-4	**Project #**	2009-15930
Operator	RC/AM	**# of Ports Available**	2
Stack Type	Circular	**# of Ports Used**	2
Stack Size	Small	**Port Inside Diameter**	3

Circular Stack or Duct Diameter			
Distance to Far Wall of Stack	(L_{fw})	24.00	in
Distance to Near Wall of Stack	(L_{nw})	8.50	in
(=Lfw - Lnw) **Diameter of Stack**	(D)	15.50	in
(=3.14(D/2/Cunits)2) **Area of Stack**	(A_s)	1.31	ft^2

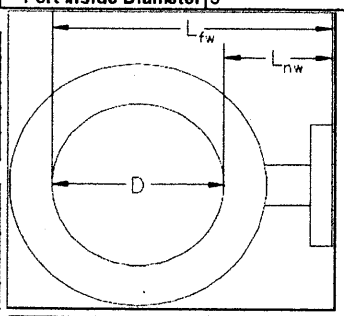

Distance from Port to Disturbances			
Distance Upstream	(B)	48.00	in
(=B/D) **Diameters Upstream**	(B_D)	3.10	diameters
Distance Downstream	(A)	60.00	in
(=A/D) **Diameters Downstream**	(A_D)	3.87	diameters

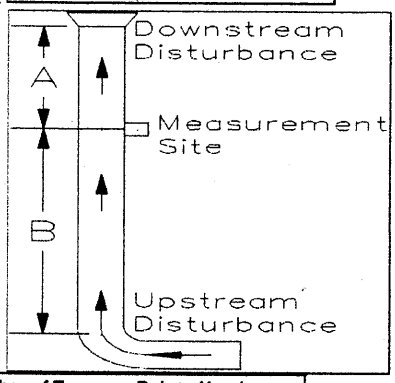

Number of Traverse Points Required			
Diameters to Flow Disturbance		Minimum Number of[1] Traverse Points	
Up Stream	Down Stream	Particulate Points	Velocity Points
2.00-4.99	0.50-1.24	24	16
5.00-5.99	1.25-1.49	20	16
6.00-6.99	1.50-1.74	16	12
7.00-7.99	1.75-1.99	12	12
>= 8.00	>=2.00	8 or 12[2]	8 or 12[2]
Upstream Spec		24	16
Downstream Spec		8	8
Traverse Pts Required		24	16

[1] Check Minimum Number of Points for the Upstream and Downstream conditions, then use the largest.
[2] 8 for Circular Stacks 12 to 24 inches
12 for Circular Stacks over 24 inches

Number of Traverse Points Used			
2	**Ports by**	8	**Across**
16	**Pts Used**	16	**Required**
☐	**Particulate**	☑	**Velocity**

Location of Traverse Points in Circular Stacks						
Traverse Point Number	(Fraction of Stack Diameter from Inside Wall to Traverse Point) Number of Traverse Points on a Diameter					
	2	4	6	8	10	12
1	.146	.067	.044	.032	.026	.021
2	.854	.250	.146	.105	.082	.067
3		.750	.296	.194	.146	.118
4		.933	.704	.323	.226	.177
5			.854	.677	.342	.250
6			.956	.806	.658	.356
7				.895	.774	.644
8				.968	.854	.750
9					.918	.823
10					.974	.882
11						.933
12						.979

Traverse Point Locations			
Traverse Point Number	**Fraction of Stack Diameter**	**Distance from Inside Wall**	**Distance Including Nipple Length**
		in	in
1	0.032	4/8	9
2	0.105	1 5/8	10 1/8
3	0.194	3	11 4/8
4	0.323	5	13 4/8
5	0.677	10 4/8	19
6	0.806	12 4/8	21
7	0.895	13 7/8	22 3/8
8	0.968	15	23 4/8
9			
10			
11			
12			

5.12 Instrumental Test Equipment and Procedures

The test program includes the measurement of exhaust gas concentrations of CO, NO_x, and O_2. RMCEINC used the procedures that conform to the requirements of Title 40 CFR, Part 60, Appendix A, Methods 1, 2, 3A, 4, 7E and 10. Each of the three test runs include a minimum of one hour of continuous flue gas sampling.

Concentration measurements of O_2, CO and NO_x, were made according to EPA Methods 3A, 7E and 10 using the analyzers listed in **Table 5-1. Figure 5-3** is a schematic of the wet/dry extractive reference measurement gas sampling system used by RMCEINC. All components of the sampling system that contact the sample are stainless steel, glass, or Teflon.

A sampling probe provides a method of drawing a continuous sample of flue gases. The probe assembly is temperature controlled to maintain the sample above the dew point and includes a calibration value and sample filter. A temperature controlled Teflon umbilical connects the probe assembly to an ice bath condenser. The condenser is equipped with a condensate discharge pump to continuously remove the condensate from the condenser traps. The dried sample is then transported to the mobile laboratory's sample manifold.

TABLE 5-1 REFERENCE METHOD ANALYZERS

Parameter	Analyzer	Analytical Technique	Instrument Span
NO_x	Thermo Environmental Instruments Model 42	Chemiluminescence	0-245, ppm
CO	Thermo Environmental Instruments Model 48	Gas Filter Correlation	0-900, ppm
O_2	Teledyne – 3300 or Servomex 1440	Fuel Cell / Paramagnetic	0-21 %

Figure 5-3. Reference Method Gas Sampling System Diagram

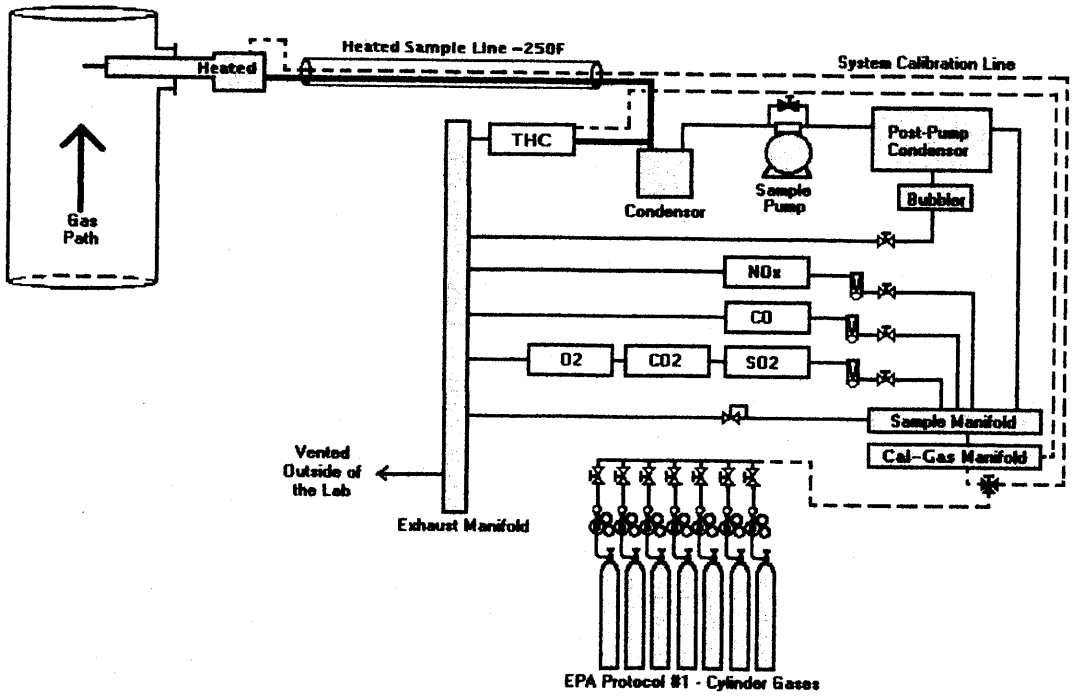

5.13 Instrumental Analytical Data

RMCEINC performed test runs to measures the flue gas for NO_x and CO in terms of an emission rate (lb/BHP-Hr). A three-point (zero, mid-range, and high-range) analyzer calibration error check on each reference analyzer was performed before initiating the testing. This check is conducted after final calibration adjustments are made by injecting the calibration gases directly into each gas analyzer and recording the responses on the reference data acquisition system.

RMCEINC conducts zero and upscale calibration checks both before and after each test run in order to quantify measurement system calibration drift and sampling system bias. Upscale is either the low-, mid- or high-range gas, whichever most closely approximates the flue gas level. During these checks, the calibration gases are introduced into the sampling system through a 3-way valve assembly at the probe outlet so that the calibration gases are analyzed in the same manner as the flue gas samples.

RMCEINC recorded the reference analyzer measurements as 1-minute and 60-minute averages on its DAS. All test run concentration results were determined from the average gas concentrations measured during the run and adjusted based on the zero and upscale sampling system bias check results (Equation 7E-1 presented in Title 40 CFR Part 60, Method 7E, Section 8). The reference CO and NO_x emission values in terms of pounds per hour and grams per break horsepower hour were computed from each test run average of adjusted, dry basis CO, NO_x and percent O_2 using the Title 40 CFR Part 60 Appendix A Method 19.

6.0 EQUIPMENT CALIBRATION AND QUALITY ASSURANCE

RMCEINC followed the calibration and quality assurance procedures of EPA Methods 1, 2, 3A, 4, 7E, and 10 throughout the test program. The maintenance for our meterboxes, probes, analyzers and a majority of our other test equipment is performed off site by either Clean Air Engineering or Millenium Instruments. These companies ensure that our equipment is operating correctly and within the specification of the respective methods. All equipment is calibrated in accordance with the EPA Methods and guidelines.

The results of sampling system bias and calibration drift tests for each test run are calculated and presented in the test report. Cylinder gases used during the testing are certified to meet or exceed EPA Protocol 1 requirements. The meter box calibrations, pitot tube inspections, calibration gas certificates of analysis and the analyzer quality assurance checks are included in **Appendix C**.

RMCEINC uses computers throughout the test program. Spreadsheets and software programs are checked in our office for accuracy. Software used by RMCEINC is structured to eliminate human errors in data entry where possible by automating the process. When possible RMCEINC, inputs field data directly into the DAS system and eliminates the hand written field data sheets. These systems provide an accurate measurement of the raw test data and are not used to modify or change test data in any manner. Equations used in these systems are taken directly from the CFR when possible, and notations are provided if originated from an alternate source or customized in any manner.

APPENDIX A. TEST SUMMARY SHEETS

Emissions Summary

REFERENCE DATA SUMMARY

Company: Waste Management of Texas
Source: Engines1, 2,3 & 4

Date: 9/3/2009
Project #: 2009-15028

CAL	RUN #	Test Duration 5:36 Start Time	End Time	O2-4 %	CO-4 ppm	NOx-4 ppm		NOx-3 ppm	CO-3 ppm	O2-3 %	NOx-4	CO-4		NOx-3	CO-3	NOx-4	CO-4		CO-3	NOx-3	DSCFM
				DATA Link from the DATA Logger							ppm @15% O2					lbs/mmBtu					
					Engine #1				Engine #2		Engine #1				Engine #2	Engine #1				Engine #2	Engine #1
	1	9/3/2009 9:00	10:00	7.83	570.66	60.41		57.83	669.52	7.53	27.27	257.64		25.53	295.52	0.110	0.633		0.726	0.103	4316.0
0:10	2	9/3/2009 10:10	11:10	7.79	572.35	63.60		59.36	671.56	7.51	28.61	257.50		26.16	295.91	0.116	0.633		0.727	0.106	4421.0
0:05	3	9/3/2009 11:15	12:15	7.79	569.35	64.47		60.72	669.66	7.56	29.00	256.13		26.85	296.09	0.117	0.629		0.728	0.108	4422.0
					Engne #4				Engine #3		Engne #4				Engine #3	Engne #4				Engine #3	Engne #4
0:15	4	9/3/2009 12:30	13:30	7.67	634.21	69.77		67.49	625.34	7.69	31.12	282.85		30.13	279.21	0.126	0.695		0.686	0.122	4377.0
0:06	5	9/3/2009 13:36	14:36	7.63	627.57	68.82		67.28	634.61	7.63	30.59	278.94		29.92	282.24	0.124	0.685		0.694	0.121	4425.0
0:06	6	9/3/2009 14:42	16:05	7.72	629.63	68.96		68.15	629.74	7.77	30.87	281.87		30.63	283.02	0.125	0.693		0.696	0.124	4346.0
	7		17:11																		
	8		12:19																		
	9		**13:25**																		
	10		14:31																		
	11		15:37																		
	12		16:43																		
	13		17:49																		
	14		18:55																		
	15		20:01																		
			AVERAGE	7.74	600.63	66.01		63.47	650.07	7.62	29.58	269.16		28.20	288.66	0.119	0.661		0.709	0.114	

	Start Time	End Time							NOx-4	CO-4		NOx-3	CO-3	NOx-4	CO-4		CO-3	NOx-3	DSCFM
			Wet based measurements corrected from DATA Logger								g/BHP-Hr					lbs/Hr			
									Engine #1				Engine #2	Engine #1				Engine #2	Engine #2
1	9/3/2009 9:00	10:00							0.38	2.18		0.37	2.60	1.87	10.73		12.81	1.82	4392
2	9/3/2009 10:10	11:10							0.41	2.24		0.38	2.62	2.01	11.03		12.89	1.87	4403
3	9/3/2009 11:15	12:15							0.41	2.23		0.38	2.56	2.04	10.97		12.60	1.88	4316
									Engne #4				Engine #3	Engne #4				Engine #3	Engine #3
4	9/3/2009 12:30	13:30							0.44	2.46		0.43	2.43	2.19	12.10		11.96	2.12	4389
5	9/3/2009 13:36	14:36							0.44	2.46		0.44	2.52	2.18	12.10		12.41	2.16	4487
6	9/3/2009 14:42	16:05							0.44	2.42		0.44	2.46	2.15	11.92		12.11	2.15	4412
7		17:11																	
8		12:19																	
9		13:25																	
10		14:31																	
11		15:37																	
12		16:43																	
13		17:49																	
14		18:55																	
15		20:01																	
		AVERAGE							0.42	2.33		0.41	2.53	2.07	11.48		12.46	2.00	

APPENDIX B. FIELD TEST DATA W/ INSTRUMENTAL TEST DATA

Method 1-4 Field Data

Flow Rate Determinations

Calibration Summaries

Instrumental Test Run Data

Reference Data Summary

Calibration Error Test at Run 1 . STRATA Version 2.01

Operator: RMC Environmental, Inc.
Plant Name: WMI-DFW RDF
Location: Engine Plant

Reference Cylinder Numbers

	Zero	Low-range	Mid-range	High-range
O2-1	CX026080B	XC034274B	CC22223	SG9135827
CO-1	XC034274B	CC80309	CC10518	XC0260808
NOx-1	XC034274B	CC210634	CX026080B	CC208805
O2-2	CX026080B	XC034274B	CC22223	SG9135827
CO-2	XC034274B	CC80309	CC10518	XC0260808
NOx-2	XC034274B	CC210634	CX026080B	CC208805

Date/Time 9/3/2009 8:45:22 PASSED

Analyte	O2-1	CO-1	NOx-1	O2-2	CO-2	NOx-2
Units	%	ppm	ppm	%	ppm	ppm
Zero Ref Cyl	0.00	0.00	0.00	0.00	0.00	0.00
Zero Avg	0.08	0.93	-0.79	0.14	2.41	0.60
Zero Error%	0.40	0.10	0.30	0.70	0.30	0.20
Low Ref Cyl	5.50	255.80	49.68	5.50	255.80	49.68
Low Avg	5.61	254.79	49.20	5.65	263.48	50.87
Low Error%	0.50	0.10	0.20	0.70	0.90	0.50
Mid Ref Cyl	12.48	502.80	115.40	12.48	502.80	115.40
Mid Avg	12.56	505.56	116.09	12.61	506.49	112.62
Mid Error%	0.40	0.30	0.30	0.60	0.40	1.10
High Ref Cyl	20.86	898.80	262.60	20.86	898.80	262.60
High Avg	20.79	898.63	262.59	20.97	891.85	262.48
High Error%	0.40	0.00	0.00	0.50	0.80	0.00

Initial System Bias Check for Run 1 . STRATA Version 2.01

Operator: RMC Environmental, Inc.
Plant Name: WMI-DFW RDF
Location: Engine Plant

Reference Cylinder Numbers

	Zero	Span
O2-1	CX026080B	XC034274B
CO-1	XC034274B	CC10518
NOx-1	XC034274B	CX026080B
O2-2	CX026080B	XC034274B
CO-2	XC034274B	CC10518
NOx-2	XC034274B	CX026080B

Date/Time 9/3/2009 8:57:27 PASSED

Analyte	O2-1	CO-1	NOx-1	O2-2	CO-2	NOx-2
Units	%	ppm	ppm	%	ppm	ppm
Zero Ref Cyl	0.00	0.00	0.00	0.00	0.00	0.00
Zero Cal	0.08	0.93	-0.79	0.14	2.41	0.60
Zero Avg	0.06	-0.03	-0.72	0.14	3.23	4.51
Zero Bias%	0.10	0.10	0.00	0.00	0.10	1.60
Zero Drift%						
Span Ref Cyl	5.50	502.80	115.40	5.50	502.80	115.40
Span Cal	5.61	505.56	116.09	5.65	506.49	112.62
Span Avg	5.56	491.19	115.39	5.60	508.27	112.75
Span Bias%	0.30	1.60	0.30	0.20	0.20	0.10
Span Drift%						

Test Run 1 Begin. STRATA Version 2.01
Operator: RMC Environmental, Inc.
Plant Name: WMI-DFW RDF
Location: Engine Plant

		O2-1 %	CO-1 ppm	NOx-1 ppm	O2-2 %	CO-2 ppm	NOx-2 ppm
Begin calculating run averages							
9/3/2009	9:01:03	7.758	560.48	61.36	7.634	683.23	58.6
9/3/2009	9:02:03	7.782	559.83	56.61	7.637	668.37	54.54
9/3/2009	9:03:02	7.751	558.03	58.01	7.62	682.1	58.85
9/3/2009	9:04:02	7.76	558.99	57.04	7.627	677.66	59.06
9/3/2009	9:05:01	7.762	559.4	57.93	7.623	676.76	58.4
9/3/2009	9:06:03	7.778	559.51	55.61	7.61	676.63	56.77
9/3/2009	9:07:02	7.69	558.27	57.01	7.56	685.01	59.02
9/3/2009	9:08:02	7.828	569.76	60.77	7.644	682.64	60.77
9/3/2009	9:09:01	7.759	557.21	54.29	7.62	672.74	55.55
9/3/2009	9:10:03	7.797	558.39	58.67	7.651	679.77	59.55
9/3/2009	9:11:02	7.837	557.83	58.04	7.64	670.29	57.38
9/3/2009	9:12:02	7.835	552.11	56.5	7.644	665.65	56.33
9/3/2009	9:13:01	7.776	547.84	55.72	7.606	673.33	56.3
9/3/2009	9:14:03	7.796	557.34	59.79	7.617	682.37	60.6
9/3/2009	9:15:02	7.826	559.11	57.3	7.661	672.42	56.91
9/3/2009	9:16:02	7.721	551.09	56.55	7.553	676.53	56.85
9/3/2009	9:17:01	7.811	562.31	60.22	7.591	679.25	58.57
9/3/2009	9:18:02	7.789	556.91	58.51	7.576	679.79	58.1
9/3/2009	9:19:02	7.806	561.03	60.56	7.584	682.99	59.93
9/3/2009	9:20:01	7.794	558.61	58.71	7.584	679.03	58.02
Begin Traverse							
9/3/2009	9:21:03	7.8	558.59	61.19	7.582	685.98	60.75
9/3/2009	9:22:02	7.8	558.25	59.11	7.626	674.85	58.56
9/3/2009	9:23:01	7.802	553.84	58.68	7.594	680.22	58.85
9/3/2009	9:24:03	7.846	554.85	58.67	7.66	667.32	57.24
9/3/2009	9:25:02	7.799	553.35	60.35	7.612	677.95	59.18
9/3/2009	9:26:01	7.871	555.61	59.94	7.674	677.87	60
9/3/2009	9:27:03	7.827	550.46	57.34	7.65	667.41	57.05
9/3/2009	9:28:02	7.843	551.72	60.22	7.663	670.41	59.08
9/3/2009	9:29:02	7.816	553.39	59.79	7.635	667.83	58.24
9/3/2009	9:30:02	7.843	555.24	59.44	7.639	666.23	56.07
9/3/2009	9:31:01	7.816	550.2	56.92	7.624	666.44	55.87
9/3/2009	9:32:03	8.093	552.38	58.69	7.646	670.25	57.5
9/3/2009	9:33:02	8.363	552.7	58.49	7.645	667.94	55.78
9/3/2009	9:34:02	8.233	551.44	58.53	7.617	669.52	55.42
9/3/2009	9:35:03	7.911	556.15	61.82	7.605	675.34	59.05
9/3/2009	9:36:02	7.794	553.82	59.56	7.6	658.44	54.84
9/3/2009	9:37:02	7.789	551.52	59.49	7.571	668.47	55.36
9/3/2009	9:38:03	7.744	553.75	58.6	7.544	677.24	56.65
9/3/2009	9:39:02	8.109	559.41	61.46	7.547	680.83	59.24

9/3/2009	9:40:02	8.208	561.05	61.17	7.624	672.56	57.23
Begin Traverse							
9/3/2009	9:41:01	7.832	553.86	60.2	7.634	671.24	57.03
9/3/2009	9:42:03	7.8	554.95	61.38	7.597	672.19	57.22
9/3/2009	9:43:02	7.813	558.38	61.58	7.62	676.81	58.65
9/3/2009	9:44:01	7.859	557.68	61	7.647	673.73	57
9/3/2009	9:45:03	7.818	551.93	58.8	7.634	664.87	55.67
9/3/2009	9:46:02	7.82	553.35	61.83	7.63	669.88	57.34
9/3/2009	9:47:02	7.871	558.03	62.23	7.637	669.86	57.65
9/3/2009	9:48:03	7.807	551.92	59.61	7.594	664.38	56.29
9/3/2009	9:49:02	7.841	554.56	61.79	7.592	664.52	55.68
9/3/2009	9:50:01	8.18	550.77	59.25	7.581	667.13	54.73
9/3/2009	9:51:03	8.447	552.16	60.37	7.617	670.89	55.9
9/3/2009	9:52:02	7.821	550.78	60.26	7.563	671.68	56.38
9/3/2009	9:53:01	7.815	554.17	61.75	7.595	676.47	57.64
9/3/2009	9:54:03	7.83	551.47	58.06	7.597	664.75	54.41
9/3/2009	9:55:02	7.784	549.14	59.05	7.564	670.37	56.19
9/3/2009	9:56:03	8.073	552.34	58.91	7.57	679.06	56.98
9/3/2009	9:57:02	8.403	553.82	58.84	7.657	668.22	57.19
9/3/2009	9:58:02	7.946	552.19	60.02	7.606	671.04	57.01
9/3/2009	9:59:01	7.782	558.88	61.67	7.588	676.55	58.06
9/3/2009	10:00:02	7.801	558.13	61.59	7.624	671.43	57.89
Average of Test Run		O2-1 %	CO-1 ppm	NOx-1 ppm	O2-2 %	CO-2 ppm	NOx-2 ppm
9/3/2009	10:00:02	7.872	555.5	59.28	7.613	673.42	57.45
Test Run 1 End							

Final System Bias Check for Run 1 . STRATA Version 2.01

Operator:	RMC Environmental, Inc.
Plant Name:	WMI-DFW RDF
Location:	Engine Plant

Reference Cylinder Numbers

	Zero	Span
O2-1	CX026080B	XC034274B
CO-1	XC034274B	CC10518
NOx-1	XC034274B	CX026080B
O2-2	CX026080B	XC034274B
CO-2	XC034274B	CC10518
NOx-2	XC034274B	CX026080B

Date/Time	9/3/2009	10:07:45 PASSED				
Analyte	O2-1	CO-1	NOx-1	O2-2	CO-2	NOx-2
Units	%	ppm	ppm	%	ppm	ppm
Zero Ref Cyl	0.00	0.00	0.00	0.00	0.00	0.00
Zero Cal	0.08	0.93	-0.79	0.14	2.41	0.60
Zero Avg	0.03	-0.12	-0.25	0.14	-1.04	1.89
Zero Bias%	0.30	0.10	0.20	0.00	0.40	0.50
Zero Drift%	-0.20	0.00	0.20	0.00	-0.50	-1.00
Span Ref Cyl	5.50	502.80	115.40	5.50	502.80	115.40
Span Cal	5.61	505.56	116.09	5.65	506.49	112.62
Span Avg	5.53	487.68	112.00	5.59	503.73	110.16
Span Bias%	0.40	2.00	1.60	0.30	0.30	1.00
Span Drift%	-0.10	-0.40	-1.40	0.00	-0.50	-1.00
Ini Zero Avg	0.06	-0.03	-0.72	0.14	3.23	4.51
Ini Span Avg	5.56	491.19	115.39	5.60	508.27	112.75
Run Avg	7.87	555.50	59.28	7.61	673.42	57.45
Co	0.04	-0.07	-0.49	0.14	1.09	3.20
Cm	5.54	489.43	113.69	5.60	506.00	111.45
Correct Avg	7.83	570.66	60.41	7.53	669.52	57.83

Test Run 2 Begin. STRATA Version 2.01
Operator: RMC Environmental, Inc.
Plant Name: WMI-DFW RDF
Location: Engine Plant

Begin calculating run averages

		O2-1 %	CO-1 ppm	NOx-1 ppm	O2-2 %	CO-2 ppm	NOx-2 ppm
9/3/2009	10:11:02	7.752	557.16	62.25	7.581	684.47	60.11
9/3/2009	10:12:02	7.909	564.02	65.7	7.687	668.5	59.03
9/3/2009	10:13:01	7.808	548.2	59.22	7.646	660.03	52.6
9/3/2009	10:14:03	7.787	547.63	61.31	7.619	669	56.29
9/3/2009	10:15:02	7.85	554.88	62.51	7.615	672	57.84
9/3/2009	10:16:02	8.364	554.59	63.05	7.629	670.49	58.15
9/3/2009	10:17:01	8.048	553.35	60.5	7.614	666.54	55.16
9/3/2009	10:18:03	8.199	550.92	61.04	7.638	662.57	55.14
9/3/2009	10:19:02	7.886	548.94	61.01	7.632	665.83	56
9/3/2009	10:20:01	7.844	550.21	62.13	7.606	672.68	58.1
9/3/2009	10:21:02	7.936	558.96	64.31	7.675	664.42	56.64
9/3/2009	10:22:02	8.076	548.03	59.13	7.589	658.82	53.17
9/3/2009	10:23:01	8.072	548.76	60.72	7.6	668.96	57.43
9/3/2009	10:24:03	7.862	549.74	61.1	7.621	671.62	57.34
9/3/2009	10:25:02	7.865	547.42	56.42	7.684	647.71	49.6
9/3/2009	10:26:01	7.899	538.45	54.16	7.704	640.9	46.45
9/3/2009	10:27:03	7.797	538.83	55.04	7.588	654.86	49.41
9/3/2009	10:28:02	7.774	545.06	57.47	7.565	663.08	51.59
9/3/2009	10:29:01	7.759	550.52	58.62	7.554	671.39	53.94
9/3/2009	10:30:03	7.799	555.15	60.75	7.554	673.87	57.5
9/3/2009	10:31:02	7.814	558.74	62.64	7.582	666.6	56.14
9/3/2009	10:32:01	7.817	552.05	60.36	7.55	666.87	54.92
9/3/2009	10:33:03	7.832	551.14	60.48	7.578	672.76	55.55
9/3/2009	10:34:02	7.848	551.77	59.99	7.523	674.04	55.34
9/3/2009	10:35:01	7.783	559.24	64.88	7.38	714.34	65.8
9/3/2009	10:36:03	7.773	597.3	78.3	7.503	717.63	73.65
9/3/2009	10:37:02	7.727	572.4	64.22	7.516	678.74	60.19
9/3/2009	10:38:01	7.77	558.91	65.22	7.519	679.18	58.92
9/3/2009	10:39:03	7.714	558.11	63.79	7.5	687.68	60.27
9/3/2009	10:40:02	7.8	557.52	63.13	7.578	671.3	58.62
9/3/2009	10:41:01	7.685	550.63	60.7	7.515	674.12	57.33
9/3/2009	10:42:03	7.72	558.91	65.06	7.556	688.63	62.82
9/3/2009	10:43:02	7.769	558.09	60.82	7.571	672.69	58.11
9/3/2009	10:44:01	7.752	554.61	61.86	7.574	679.27	59.24
9/3/2009	10:45:03	7.734	552.12	58.58	7.586	667.37	55.68
9/3/2009	10:46:02	7.702	560.84	67.36	7.522	689.36	62.54
9/3/2009	10:47:01	7.77	565.03	63.09	7.623	681.17	60.44
9/3/2009	10:48:02	7.793	553.45	61.06	7.637	666.77	56.99
9/3/2009	10:49:02	7.781	547.79	59.59	7.609	668.35	56.65
9/3/2009	10:50:03	7.748	550.15	60.03	7.585	669.67	56.05

9/3/2009	10:51:02	7.739	550.58	60.38	7.598	676.29	57.53
9/3/2009	10:52:01	7.824	552.21	60.5	7.608	665.67	56.37
9/3/2009	10:53:03	7.824	541.22	54.01	7.673	644.38	47.93
9/3/2009	10:54:02	7.707	540.03	58.13	7.549	668.05	54.4
9/3/2009	10:55:01	7.779	555.06	61.59	7.608	676.42	59.14
9/3/2009	10:56:03	7.746	551.92	59.5	7.606	667.66	55.74
9/3/2009	10:57:02	7.741	548.66	59.02	7.544	668.67	55.71
9/3/2009	10:58:03	7.761	551.29	59.93	7.602	672.24	57.42
9/3/2009	10:59:02	7.757	550.47	59.92	7.579	665.53	55.57
9/3/2009	11:00:01	7.749	549.92	60.41	7.565	669.41	56.76
9/3/2009	11:01:03	7.758	550.66	59.2	7.568	664.44	55.09
9/3/2009	11:02:02	7.705	551.07	60.09	7.537	671.53	56.74
9/3/2009	11:03:02	7.775	554.18	60.25	7.586	676.01	57.44
9/3/2009	11:04:03	7.733	548.78	58.74	7.612	672.27	56.95
9/3/2009	11:05:02	7.747	552.52	60.47	7.583	670.11	56.56
9/3/2009	11:06:01	7.764	553.39	60.96	7.6	669.08	57.25
9/3/2009	11:07:03	7.77	551.13	60.41	7.608	666.01	56
9/3/2009	11:08:02	7.707	551.07	60.14	7.54	666.69	56.43
9/3/2009	11:09:01	7.751	554.95	61.47	7.558	675.68	56.88
9/3/2009	11:10:03	7.762	556.49	62.78	7.574	677.43	58.65

Average of Test Run		O2-1 %	CO-1 ppm	NOx-1 ppm	O2-2 %	CO-2 ppm	NOx-2 ppm
9/3/2009	11:10:03	7.812	553.26	61.09	7.585	671.31	56.86

Test Run 2 End

Final System Bias Check for Run 2 . STRATA Version 2.01

Operator: RMC Environmental, Inc.
Plant Name: WMI-DFW RDF
Location: Engine Plant

Reference Cylinder Numbers

	Zero	Span
O2-1	CX026080B	XC034274B
CO-1	XC034274B	CC10518
NOx-1	XC034274B	CX026080B
O2-2	CX026080B	XC034274B
CO-2	XC034274B	CC10518
NOx-2	XC034274B	CX026080B

Date/Time 9/3/2009 11:14:14 PASSED

Analyte	O2-1	CO-1	NOx-1	O2-2	CO-2	NOx-2
Units	%	ppm	ppm	%	ppm	ppm
Zero Ref Cyl	0.00	0.00	0.00	0.00	0.00	0.00
Zero Cal	0.08	0.93	-0.79	0.14	2.41	0.60
Zero Avg	0.02	-0.20	-0.16	0.14	-3.12	0.97
Zero Bias%	0.30	0.10	0.30	0.00	0.60	0.20
Zero Drift%	0.00	0.00	0.00	0.00	-0.20	-0.40
Span Ref Cyl	5.50	502.80	115.40	5.50	502.80	115.40
Span Cal	5.61	505.56	116.09	5.65	506.49	112.62
Span Avg	5.53	484.34	110.05	5.59	500.46	108.20
Span Bias%	0.40	2.40	2.40	0.30	0.70	1.80
Span Drift%	0.00	-0.40	-0.80	0.00	-0.40	-0.80
Ini Zero Avg	0.03	-0.12	-0.25	0.14	-1.04	1.89
Ini Span Avg	5.53	487.68	112.00	5.59	503.73	110.16
Run Avg	7.81	553.26	61.09	7.59	671.31	56.86
Co	0.02	-0.16	-0.21	0.14	-2.08	1.43
Cm	5.53	486.01	111.02	5.59	502.09	109.18
Correct Avg	7.79	572.35	63.60	7.51	671.56	59.36

Test Run 3 Begin. STRATA Version 2.01
Operator: RMC Environmental, Inc.
Plant Nam WMI-DFW RDF
Location: Engine Plant

Begin calculating run averages

		O2-1 %	CO-1 ppm	NOx-1 ppm	O2-2 %	CO-2 ppm	NOx-2 ppm
9/3/2009	11:16:19	7.785	540.53	60.37	7.608	668	56.61
9/3/2009	11:17:19	7.759	550.73	60.52	7.624	670.91	58.27
9/3/2009	11:18:20	7.764	553.45	62.59	7.635	671.58	58.29
9/3/2009	11:19:19	7.821	555.83	62.68	7.635	665.23	56.24
9/3/2009	11:20:18	7.809	551.23	61.93	7.621	668.86	57.29
9/3/2009	11:21:20	7.861	548.55	60.94	7.671	665.44	56.83
9/3/2009	11:22:19	7.762	547.16	60.97	7.634	672.5	58.39
9/3/2009	11:23:18	7.804	554.36	61.9	7.631	663.84	56.44
9/3/2009	11:24:20	7.839	549.91	61.34	7.658	667.59	57.06
9/3/2009	11:25:19	7.844	549.26	63.52	7.635	672.62	60.21
9/3/2009	11:26:19	7.814	551.65	63.29	7.634	666.51	58.9
9/3/2009	11:27:18	7.812	552.46	62.29	7.644	667.71	58.24
9/3/2009	11:28:20	7.796	549.96	61.17	7.648	669.52	58.63
9/3/2009	11:29:19	7.794	549.11	60.41	7.651	660.52	56.35
9/3/2009	11:30:18	7.819	548.74	61.74	7.63	667.49	57.36
9/3/2009	11:31:20	7.771	548.09	59.6	7.633	664.18	56.55
9/3/2009	11:32:19	7.833	549.51	62	7.663	661.25	56.55
9/3/2009	11:33:18	7.796	543.75	58.1	7.63	661.91	55.02
9/3/2009	11:34:20	7.802	547.35	61.26	7.647	672.38	59.29
9/3/2009	11:35:19	7.79	550.71	63.2	7.688	674.8	60.78
9/3/2009	11:36:20	7.822	551.15	61.33	7.68	660.19	57.06
9/3/2009	11:37:19	7.791	548.85	61.05	7.654	660.79	56.28
9/3/2009	11:38:19	7.797	549.9	60.81	7.664	664.92	58.05
9/3/2009	11:39:20	7.725	552.05	62.44	7.634	673.32	60.58
9/3/2009	11:40:19	7.749	554.12	62.49	7.634	663.43	58.37
9/3/2009	11:41:18	7.731	548.96	60.28	7.627	659.95	56.54
9/3/2009	11:42:20	7.716	549.33	61.62	7.589	668.59	57.62
9/3/2009	11:43:19	7.752	553.62	63.7	7.63	672.58	59.88
9/3/2009	11:44:18	7.738	551.92	61.52	7.63	667.12	58.99
9/3/2009	11:45:19	7.765	551.47	62.18	7.634	668.57	57.52
9/3/2009	11:46:19	7.792	552.48	63.19	7.634	665.47	58.52
9/3/2009	11:47:20	7.757	547.66	61.03	7.623	666.07	56.95
9/3/2009	11:48:19	7.796	554.01	65.08	7.633	673.36	58.61
9/3/2009	11:49:18	7.861	554.07	64.55	7.633	669.3	59.34
9/3/2009	11:50:20	7.852	547.74	62.3	7.659	662.38	58.06
9/3/2009	11:51:19	7.87	544.1	63.51	7.663	665.18	59.06
9/3/2009	11:52:18	7.855	547.12	63.78	7.653	665.59	58.92
9/3/2009	11:53:20	7.876	543.29	61.35	7.633	656.61	56.58
9/3/2009	11:54:19	7.809	542.22	61.53	7.622	662.94	56.65
9/3/2009	11:55:18	7.789	543.19	60.98	7.618	665.98	56.61

9/3/2009	11:56:20	7.814	547.1	61.67	7.619	660.3	56.21
9/3/2009	11:57:19	7.788	544.69	60.58	7.605	664.94	56.97
9/3/2009	11:58:18	7.786	544.38	61.07	7.579	666.49	57.95
9/3/2009	11:59:20	7.811	550	63.51	7.605	666.74	58.39
9/3/2009	12:00:19	7.78	543.14	59.88	7.6	661.41	56.08
9/3/2009	12:01:18	7.8	545.06	62.21	7.631	664.29	57.3
9/3/2009	12:02:20	7.796	542.91	60.9	7.621	662	56.69
9/3/2009	12:03:19	7.778	544.15	61.36	7.607	665.08	58.41
9/3/2009	12:04:18	7.783	547.51	63.42	7.611	668.66	59.27
9/3/2009	12:05:20	7.79	546.94	60.65	7.637	663.08	56.85
9/3/2009	12:06:19	7.769	545.06	60.52	7.589	660.05	56.93
9/3/2009	12:07:19	7.759	546.78	62.93	7.568	670.56	59.56
9/3/2009	12:08:20	7.771	549.6	63.31	7.601	664.35	59.17
9/3/2009	12:09:19	7.759	546.76	61.54	7.565	662.8	57.52
9/3/2009	12:10:19	7.763	548.08	61.96	7.598	667.44	58.92
9/3/2009	12:11:20	7.766	546.32	61.22	7.609	659.88	57.7
9/3/2009	12:12:19	7.752	546.65	61.85	7.598	667.42	59.2
9/3/2009	12:13:18	7.825	549.83	61.48	7.643	659.48	57.12
9/3/2009	12:14:20	7.775	541.48	59.69	7.633	657.92	56.43
9/3/2009	12:15:19	7.748	544	62.36	7.619	666.2	58.6
Average of Test Run		O2-1	CO-1	NOx-1	O2-2	CO-2	NOx-2
		%	ppm	ppm	%	ppm	ppm
9/3/2009	12:15:20	7.792	548.33	61.77	7.628	665.73	57.81

Test Run 3 End

Final System Bias Check for Run 3 . STRATA Version 2.01

Operator:	RMC Environmental, Inc.	
Plant Name:	WMI-DFW RDF	
Location:	Engine Plant	
	Reference Cylinder Numbers	
	Zero	Span
O2-1	CX026080B	XC034274B
CO-1	XC034274B	CC10518
NOx-1	XC034274B	CX026080B
O2-2	CX026080B	XC034274B
CO-2	XC034274B	CC10518
NOx-2	XC034274B	CX026080B

Date/Time	9/3/2009	12:19:46 PASSED				
Analyte	O2-1	CO-1	NOx-1	O2-2	CO-2	NOx-2
Units	%	ppm	ppm	%	ppm	ppm
Zero Ref Cyl	0.00	0.00	0.00	0.00	0.00	0.00
Zero Cal	0.08	0.93	-0.79	0.14	2.41	0.60
Zero Avg	0.01	-0.22	-0.20	0.13	-4.17	1.15
Zero Bias%	0.40	0.10	0.20	0.00	0.70	0.20
Zero Drift%	-0.10	0.00	0.00	0.00	-0.10	0.10
Span Ref Cyl	5.50	502.80	115.40	5.50	502.80	115.40
Span Cal	5.61	505.56	116.09	5.65	506.49	112.62
Span Avg	5.49	484.08	111.40	5.59	497.43	109.61
Span Bias%	0.60	2.40	1.90	0.30	1.00	1.20
Span Drift%	-0.20	0.00	0.50	0.00	-0.30	0.60
Ini Zero Avg	0.02	-0.20	-0.16	0.14	-3.12	0.97
Ini Span Avg	5.53	484.34	110.05	5.59	500.46	108.20
Run Avg	7.79	548.33	61.77	7.63	665.73	57.81
Co	0.01	-0.21	-0.18	0.13	-3.65	1.06
Cm	5.51	484.21	110.72	5.59	498.94	108.91
Correct Avg	7.79	569.35	64.47	7.56	669.66	60.72

Test Run 4 Begin. STRATA Version 2.01
Operator: RMC Environmental, Inc.
Plant Nam WMI-DFW RDF
Location: Engine Plant

		O2-4 %	CO-4 ppm	NOx-4 ppm	O2-3 %	CO-3 ppm	NOx-3 ppm
Begin calculating run averages							
9/3/2009	12:31:25	7.687	605.87	64.31	7.768	623.13	64.44
9/3/2009	12:32:24	7.689	607.42	66.28	7.744	624.87	65
9/3/2009	12:33:25	7.713	613.24	67.31	7.796	623.7	65.75
9/3/2009	12:34:24	7.681	606.43	66.14	7.762	623.56	65.07
9/3/2009	12:35:24	7.693	611.05	68.4	7.766	627.73	68.12
9/3/2009	12:36:25	7.704	612.29	68.7	7.755	622.21	65.63
9/3/2009	12:37:24	7.717	606.92	65.07	7.819	617.34	62.99
9/3/2009	12:38:23	7.695	605.81	67.43	7.766	623.28	65.33
9/3/2009	12:39:25	7.702	610.36	68.18	7.81	625.86	65.92
9/3/2009	12:40:24	7.679	610.03	67.01	7.776	622.93	64.85
9/3/2009	12:41:25	7.708	612.57	67.14	7.819	619.09	64.23
9/3/2009	12:42:25	7.706	606.72	67.24	7.815	620.79	64.6
9/3/2009	12:43:24	7.676	606.62	64.91	7.766	622.6	63.72
9/3/2009	12:44:25	7.711	613.39	70.02	7.802	625.55	66.7
9/3/2009	12:45:24	7.689	606.77	64.08	7.777	614.16	62.15
9/3/2009	12:46:23	7.681	605.48	66.92	7.756	623.92	63.77
9/3/2009	12:47:25	7.682	611.62	67.48	7.755	624.91	63.26
9/3/2009	12:48:24	7.712	614.03	68.66	7.791	622.41	64.33
9/3/2009	12:49:25	7.689	608.72	66.47	7.793	622.01	65.15
9/3/2009	12:50:24	7.732	609.89	68.01	7.812	620.07	65.48
Begin Traverse							
9/3/2009	12:51:24	7.729	610.02	68.75	7.804	623.5	66.88
9/3/2009	12:52:25	7.719	604.92	64.07	7.803	608.11	60.44
9/3/2009	12:53:24	7.709	603.38	67.13	7.762	622.77	64
9/3/2009	12:54:24	7.687	610.81	67.4	7.78	620.87	64.73
9/3/2009	12:55:25	7.72	612.07	69.01	7.762	626.64	65.44
9/3/2009	12:56:25	7.71	611.27	68.38	7.808	621.71	65.47
9/3/2009	12:57:24	7.706	609.16	68.61	7.797	624.68	66.72
9/3/2009	12:58:24	7.725	609.25	65.99	7.793	621.09	63.88
9/3/2009	12:59:24	7.712	607.67	67.64	7.815	625.94	65.12
9/3/2009	13:00:23	7.716	611.98	67.53	7.773	618.5	64.14
9/3/2009	13:01:25	7.715	608.84	66.87	7.813	620.12	63.98
9/3/2009	13:02:23	7.672	604.36	64.57	7.746	623.46	63.33
9/3/2009	13:03:25	7.676	614.65	69	7.755	633.72	67.16
9/3/2009	13:04:24	7.716	616.59	68.04	7.816	621.92	64.3
9/3/2009	13:05:23	7.72	610.89	67.07	7.767	621.71	63.73
9/3/2009	13:06:25	7.707	607.14	66.38	7.774	620.49	64.69
9/3/2009	13:07:24	7.719	608.1	68.14	7.75	628.09	66.28
9/3/2009	13:08:25	7.684	610.07	66.98	7.736	626.52	64.9
9/3/2009	13:09:24	7.675	614.18	68.64	7.746	631.14	65.59

9/3/2009	13:10:24	7.71	616.49	67.82	7.763	624.4	64.21
Begin Traverse							
9/3/2009	13:11:25	7.672	610.25	68.56	7.746	631.94	65.65
9/3/2009	13:12:25	7.721	613.88	66.74	7.746	622.88	62.89
9/3/2009	13:13:24	7.695	609.29	67	7.775	626.15	63.06
9/3/2009	13:14:23	7.709	609.77	66.18	7.739	623.39	62.85
9/3/2009	13:15:25	7.705	609.02	67.39	7.746	631.82	65.11
9/3/2009	13:16:24	7.682	609.72	66.83	7.736	624.71	63.36
9/3/2009	13:17:24	7.722	611.36	66.96	7.753	624.49	63.51
9/3/2009	13:18:23	7.706	608.02	65.86	7.753	624.96	64.31
9/3/2009	13:19:25	7.721	607.98	66.7	7.749	631.47	65.93
9/3/2009	13:20:25	7.653	607.96	64.97	7.715	621.04	61.45
9/3/2009	13:21:24	7.676	613.6	69.38	7.721	634.91	66.93
9/3/2009	13:22:23	7.66	615.83	68.18	7.69	628.5	65.99
9/3/2009	13:23:25	7.667	615.91	68.88	7.709	634.26	68.49
9/3/2009	13:24:24	7.693	613.54	67.56	7.732	623.08	64.41
9/3/2009	13:25:24	7.675	609.3	65.47	7.728	621.44	63.18
9/3/2009	13:26:25	7.664	609.8	66.3	7.712	629.69	65.27
9/3/2009	13:27:24	7.689	613.28	66.55	7.745	624.64	63.65
9/3/2009	13:28:24	7.66	605.44	64.67	7.707	619.28	62.97
9/3/2009	13:29:25	7.689	613.34	68.74	7.734	628.43	67.1
9/3/2009	13:30:25	7.676	610.23	64.71	7.717	620.2	62.68
Average of Test Run		O2-4	CO-4	NOx-4	O2-3	CO-3	NOx-3
		%	ppm	ppm	%	ppm	ppm
9/3/2009	13:30:25	7.697	610.09	67.1	7.764	624.06	64.68
Test Run 4 End							

Final System Bias Check for Run 4 . STRATA Version 2.01

Operator: RMC Environmental, Inc.
Plant Name: WMI-DFW RDF
Location: Engine Plant

Reference Cylinder Numbers

	Zero	Span
O2-4	CX026080B	XC034274B
CO-4	XC034274B	CC10518
NOx-4	XC034274B	CX026080B
O2-3	CX026080B	XC034274B
CO-3	XC034274B	CC10518
NOx-3	XC034274B	CX026080B

Date/Time 9/3/2009 13:34:22 PASSED

Analyte	O2-4	CO-4	NOx-4	O2-3	CO-3	NOx-3
Units	%	ppm	ppm	%	ppm	ppm
Zero Ref Cyl	0.00	0.00	0.00	0.00	0.00	0.00
Zero Cal	0.08	0.93	-0.79	0.14	2.41	0.60
Zero Avg	0.07	0.03	-0.10	0.14	-3.89	0.96
Zero Bias%	0.10	0.10	0.30	0.00	0.70	0.10
Zero Drift%	0.30	0.00	0.00	0.00	0.00	-0.10
Span Ref Cyl	5.50	502.80	115.40	5.50	502.80	115.40
Span Cal	5.61	505.56	116.09	5.65	506.49	112.62
Span Avg	5.57	483.22	110.76	5.60	504.53	110.09
Span Bias%	0.20	2.50	2.10	0.20	0.20	1.00
Span Drift%	0.40	-0.10	-0.30	0.10	0.80	0.20
Ini Zero Avg	0.01	-0.22	-0.20	0.13	-4.17	1.15
Ini Span Avg	5.49	484.08	111.40	5.59	497.43	109.61
Run Avg	7.70	610.09	67.10	7.76	624.06	64.68
Co	0.04	-0.09	-0.15	0.14	-4.03	1.05
Cm	5.53	483.65	111.08	5.60	500.98	109.85
Correct Avg	7.67	634.21	69.77	7.69	625.34	67.49

Test Run 5 Begin. STRATA Version 2.01
Operator: RMC Environmental, Inc.
Plant Name: WMI-DFW RDF
Location: Engine Plant

Begin calculating run averages

		O2-4 %	CO-4 ppm	NOx-4 ppm	O2-3 %	CO-3 ppm	NOx-3 ppm
9/3/2009	13:36:41	7.678	595.93	65.7	7.719	630.46	61.11
9/3/2009	13:37:40	7.647	612.02	67.95	7.697	640.76	64.36
9/3/2009	13:38:41	7.684	617.18	69.65	7.719	643.12	67.37
9/3/2009	13:39:41	7.696	612.68	66.77	7.725	630.03	65.08
9/3/2009	13:40:40	7.648	608.59	67.59	7.657	635.65	64.56
9/3/2009	13:41:41	7.678	616.32	68.07	7.713	636.91	65.14
9/3/2009	13:42:40	7.668	608.56	64.72	7.725	635.16	64.55
9/3/2009	13:43:39	7.682	612.15	66.87	7.715	634.88	63.77
9/3/2009	13:44:41	7.686	612.62	67.23	7.746	634.11	64.38
9/3/2009	13:45:40	7.733	609.24	64.81	7.775	626.06	62.06
9/3/2009	13:46:41	7.699	602.91	63.62	7.73	627.46	61.56
9/3/2009	13:47:40	7.662	605.24	64.64	7.661	632.11	62.73
9/3/2009	13:48:40	7.701	615.35	67.89	7.747	634.85	63.78
9/3/2009	13:49:41	7.712	613.84	67.15	7.74	631.2	62.76
9/3/2009	13:50:40	7.684	609.34	64.98	7.696	638.44	64.85
9/3/2009	13:51:39	7.677	612.14	67.6	7.702	635.58	66.41
9/3/2009	13:52:41	7.712	614.91	67.69	7.74	630.35	64.17
9/3/2009	13:53:40	7.694	607.67	65.03	7.737	631.78	63.98
9/3/2009	13:54:39	7.664	610.66	67.32	7.709	640.43	66.61
9/3/2009	13:55:41	7.71	617.38	68.55	7.747	632.48	64.41
9/3/2009	13:56:40	7.701	609.99	65	7.744	631.49	63.2
9/3/2009	13:57:40	7.668	609.18	65.05	7.706	633.5	62.85
9/3/2009	13:58:41	7.68	614.1	67.9	7.721	644.75	66.06
9/3/2009	13:59:40	7.713	615.5	67.6	7.747	633.26	63.54
9/3/2009	14:00:40	7.693	608.73	64.29	7.747	631.25	62.32
9/3/2009	14:01:41	7.667	607.97	65.42	7.724	636.54	64.44
9/3/2009	14:02:40	7.667	612.42	66.68	7.688	636.86	65.04
9/3/2009	14:03:40	7.704	613.93	66.13	7.699	634.67	63.96
9/3/2009	14:04:41	7.69	613.01	67.41	7.727	638.02	65.74
9/3/2009	14:05:40	7.685	610.2	65.49	7.705	635.92	63.87
9/3/2009	14:06:39	7.695	611.7	66.69	7.711	640.81	65.07
9/3/2009	14:07:41	7.729	610.96	64.73	7.765	632.28	62.1
9/3/2009	14:08:40	7.712	604.59	63.47	7.728	632.38	61.9
9/3/2009	14:09:39	7.661	605.13	65.14	7.663	641.06	64.96
9/3/2009	14:10:41	7.704	615.33	67.46	7.718	638.86	65.72
9/3/2009	14:11:40	7.71	608.22	63.9	7.728	630.99	61.77
9/3/2009	14:12:40	7.679	607.34	64.5	7.731	635.99	63.24
9/3/2009	14:13:39	7.667	613.88	67.82	7.683	644	67.1
9/3/2009	14:14:41	7.69	617.49	68.13	7.65	634.76	64.61
9/3/2009	14:15:40	7.688	611.56	66.4	7.717	639.99	65.23

9/3/2009	14:16:40	7.712	613.32	68.56	7.725	634.95	64.19
9/3/2009	14:17:41	7.683	610.35	65.17	7.698	642.02	64.76
9/3/2009	14:18:41	7.727	609.9	64.28	7.755	629.91	62.5
9/3/2009	14:19:40	7.693	604.51	64.88	7.748	637.39	65.54
9/3/2009	14:20:40	7.658	610.46	64.73	7.693	637.78	64.11
9/3/2009	14:21:39	7.686	615.14	67.16	7.734	640.64	66.99
9/3/2009	14:22:41	7.715	611.26	65.96	7.745	627.14	62.62
9/3/2009	14:23:40	7.695	605.2	63.97	7.728	635.53	64.3
9/3/2009	14:24:39	7.685	608.95	65.35	7.718	634.39	64.57
9/3/2009	14:25:41	7.705	611.36	66.03	7.729	630.04	63.77
9/3/2009	14:26:40	7.664	604.56	64.56	7.678	628.26	61.45
9/3/2009	14:27:41	7.676	611.52	66.51	7.682	637.79	65.2
9/3/2009	14:28:41	7.702	611.95	66.29	7.715	638.06	64.87
9/3/2009	14:29:40	7.711	608.77	66.34	7.732	632.03	63.93
9/3/2009	14:30:41	7.704	607.71	64.64	7.733	629.06	62.22
9/3/2009	14:31:40	7.709	607.44	65.16	7.735	635.68	64.84
9/3/2009	14:32:40	7.689	607.89	65.01	7.745	636.22	65.51
9/3/2009	14:33:41	7.717	612.34	67.87	7.725	631.6	64.46
9/3/2009	14:34:41	7.708	611.65	66.02	7.737	630.53	63.49
9/3/2009	14:35:40	7.72	608.52	66.43	7.734	629.84	61.85

Average of Test Run		O2-4	CO-4	NOx-4	O2-3	CO-3	NOx-3
		%	ppm	ppm	%	ppm	ppm
9/3/2009	14:35:40	7.691	610.49	66.14	7.72	634.8	64.13

Test Run 5 End

Final System Bias Check for Run 5 . STRATA Version 2.01

Operator:	RMC Environmental, Inc.	
Plant Name:	WMI-DFW RDF	
Location:	Engine Plant	
	Reference Cylinder Numbers	
	Zero	Span
O2-4	CX026080B	XC034274B
CO-4	XC034274B	CC10518
NOx-4	XC034274B	CX026080B
O2-3	CX026080B	XC034274B
CO-3	XC034274B	CC10518
NOx-3	XC034274B	CX026080B

Date/Time	9/3/2009	14:40:30 PASSED				
Analyte	O2-4	CO-4	NOx-4	O2-3	CO-3	NOx-3
Units	%	ppm	ppm	%	ppm	ppm
Zero Ref Cyl	0.00	0.00	0.00	0.00	0.00	0.00
Zero Cal	0.08	0.93	-0.79	0.14	2.41	0.60
Zero Avg	0.07	0.06	0.09	0.14	-1.21	1.17
Zero Bias%	0.10	0.10	0.40	0.00	0.40	0.20
Zero Drift%	0.00	0.00	0.10	0.00	0.30	0.10
Span Ref Cyl	5.50	502.80	115.40	5.50	502.80	115.40
Span Cal	5.61	505.56	116.09	5.65	506.49	112.62
Span Avg	5.57	495.03	111.05	5.60	500.31	108.37
Span Bias%	0.20	1.20	2.00	0.20	0.70	1.70
Span Drift%	0.00	1.30	0.10	0.00	-0.50	-0.70
Ini Zero Avg	0.07	0.03	-0.10	0.14	-3.89	0.96
Ini Span Avg	5.57	483.22	110.76	5.60	504.53	110.09
Run Avg	7.69	610.49	66.14	7.72	634.80	64.13
Co	0.07	0.05	0.00	0.14	-2.55	1.06
Cm	5.57	489.13	110.91	5.60	502.42	109.23
Correct Avg	7.63	627.57	68.82	7.63	634.61	67.28

Test Run 6 Begin. STRATA Version 2.01
Operator: RMC Environmental, Inc.
Plant Name: WMI-DFW RDF
Location: Engine Plant

		O2-4 %	CO-4 ppm	NOx-4 ppm	O2-3 %	CO-3 ppm	NOx-3 ppm
Begin calculating run averages							
9/3/2009	14:43:07	7.702	617.27	66.24	7.719	637.37	63.02
9/3/2009	14:44:06	7.686	619.17	65.35	7.711	634.96	63.43
9/3/2009	14:45:06	7.677	622.75	68.08	7.704	635.67	64.79
9/3/2009	14:46:07	7.673	624.37	67.2	7.699	635.2	62.72
9/3/2009	14:47:07	7.658	622.55	66.7	7.704	641.45	65.04
9/3/2009	14:48:06	7.663	626.54	68.67	7.669	641.06	66.06
9/3/2009	14:49:06	7.641	627.81	70.06	7.658	641.99	65.69
9/3/2009	14:50:05	7.695	631.06	66.09	7.733	639.3	64.22
9/3/2009	14:51:07	7.667	621.5	66.01	7.688	640.02	64.68
9/3/2009	14:52:06	7.647	623.62	67.33	7.672	638.54	63.84
9/3/2009	14:53:06	7.694	628.42	68.24	7.72	639.99	64.83
9/3/2009	14:54:07	7.7	624.95	66.01	7.704	637.69	64.08
9/3/2009	14:55:07	7.714	618.07	64.79	7.716	635.95	64.28
9/3/2009	14:56:06	7.678	618.39	66.01	7.699	640.23	65.87
9/3/2009	14:57:06	7.69	621.48	64.44	7.713	630.93	63.23
9/3/2009	14:58:07	7.665	618.08	65.73	7.694	640.49	65.2
9/3/2009	14:59:07	7.662	622.4	65.41	7.665	644.54	65.98
9/3/2009	15:00:06	7.692	623.77	66.29	7.717	631.63	63.77
9/3/2009	15:01:06	7.664	617.21	62.88	7.659	632.06	61.11
9/3/2009	15:02:07	7.646	618.33	64.26	7.664	642.54	65.58
9/3/2009	15:03:07	7.672	624.75	66.63	7.715	641.79	67.35
9/3/2009	15:04:06	7.65	621.58	65.55	7.702	634.95	63.74
9/3/2009	15:05:05	7.631	621.08	64.58	7.69	636.21	64.01
9/3/2009	15:06:07	7.658	624.07	66.54	7.697	643.69	66.09
9/3/2009	15:07:06	7.686	622.28	64.41	7.699	631.77	62.08
9/3/2009	15:08:07	7.622	618.17	64.42	7.626	638.36	64.59
9/3/2009	15:09:06	7.675	626.21	67.39	7.688	643.96	67.89
9/3/2009	15:10:06	7.686	622.73	64.79	7.705	638.67	66.24
9/3/2009	15:11:05	7.777	623.05	65.4	7.788	626.11	63
9/3/2009	15:12:07	7.752	602.77	55.73	7.77	613.38	55.79
Pause							
9/3/2009	15:13:06	8.717	603.32	48.85	8.646	664.08	43.71
9/3/2009	15:14:06	18.98	660.7	39.64	19.017	265.7	18.51
9/3/2009	15:15:07	20.602	270.95	11.93	20.408	23.48	2.93
9/3/2009	15:16:06	20.602	90.26	8.58	20.592	30.87	1.97
9/3/2009	15:17:06	20.614	116.19	6.27	20.69	27.47	1.37
9/3/2009	15:18:07	20.436	108.31	3.95	10.585	304.78	17.1
9/3/2009	15:19:07	8.368	179.96	21.79	8.355	554.52	14.93
9/3/2009	15:20:06	11.548	462.63	13.24	19.979	178.99	7.9
9/3/2009	15:21:05	18.686	337.31	5.88	11.857	394.42	15.95

9/3/2009	15:22:07	7.968	218.6	16.92	8.39	566.93	29.13
9/3/2009	15:23:06	11.403	491.64	15.57	12.557	689.64	9.01
9/3/2009	15:24:05	12.092	640.08	9.65	12.43	644.79	8.04
9/3/2009	15:25:07	10.464	652.31	14.42	8.826	743.19	48.32
9/3/2009	15:26:06	7.955	701.87	65.1	6.878	684.31	58.13
9/3/2009	15:27:05	6.793	613.57	40.47	6.79	617.11	79.92
9/3/2009	15:28:07	8.983	542.89	59.7	8.72	590.24	22.21
9/3/2009	15:29:06	8.294	575.87	20.4	7.1	586.56	70.63
9/3/2009	15:30:05	7.344	534.09	40.58	7.299	532.86	63.58
9/3/2009	15:31:07	7.54	541.74	75.08	7.691	557.08	64.06
9/3/2009	15:32:06	7.755	544.54	57.68	7.696	559.65	54.53
9/3/2009	15:33:07	7.688	555.09	60.52	7.695	587.27	61.63
9/3/2009	15:34:06	7.614	574.01	62	7.669	595.18	62.23

End Pause

9/3/2009	15:35:06	7.618	613.2	82.81	7.672	655.38	81.58
9/3/2009	15:36:07	7.652	640.97	79.2	7.681	641.08	76.25
9/3/2009	15:37:06	7.794	649.42	86.37	7.839	636.02	78.81
9/3/2009	15:38:06	8.155	609.75	61.41	8.146	577.07	51.44
9/3/2009	15:39:07	7.735	558.9	52.24	7.769	594.75	53.66
9/3/2009	15:40:06	7.633	616.27	80.99	7.662	671.18	82.44
9/3/2009	15:41:06	7.866	654.77	76	7.878	621.88	69.96
9/3/2009	15:42:05	7.823	606.5	64.15	7.85	607.83	62.36
9/3/2009	15:43:06	7.9	598.21	64.42	7.924	599.15	59.44
9/3/2009	15:44:06	7.754	595.66	66.09	7.78	620.76	66.19
9/3/2009	15:45:07	7.616	621.48	75.81	7.655	655.6	75.62
9/3/2009	15:46:06	7.918	667.4	91.34	7.934	660.21	82.72
9/3/2009	15:47:06	7.993	618.07	56.41	8.014	577	49.87
9/3/2009	15:48:07	7.868	575.47	60.55	7.84	602.05	58.48
9/3/2009	15:49:07	7.861	594.71	64.99	7.858	613.34	63.32
9/3/2009	15:50:06	7.879	598.89	63.85	7.917	603.28	60.81
9/3/2009	15:51:07	7.984	589.94	59.17	7.982	587.88	54.16
9/3/2009	15:52:07	8.03	574.51	55.25	8.028	591.11	53.99
9/3/2009	15:53:06	7.781	572.64	52.52	7.784	599.65	53.56
9/3/2009	15:54:07	7.803	609.37	71.92	7.803	629.87	68.28
9/3/2009	15:55:07	7.862	617.05	66.81	7.841	610.94	63.03
9/3/2009	15:56:06	7.866	601.39	66.05	7.823	611.37	62.67
9/3/2009	15:57:05	7.838	602.94	67	7.841	617.76	65.15
9/3/2009	15:58:07	7.691	607.06	68.98	7.733	630.96	69.07
9/3/2009	15:59:06	7.848	638.89	79.62	7.823	628.38	71.6
9/3/2009	16:00:05	7.854	611.78	66.52	7.841	610.94	63.42
9/3/2009	16:01:07	7.858	603.23	67.52	7.841	614.09	65.56
9/3/2009	16:02:06	7.866	602.92	66.67	7.84	610.63	64.44
9/3/2009	16:03:05	7.869	600.08	64.77	7.892	607.33	63.32

Average of Test Run		O2-4	CO-4	NOx-4	O2-3	CO-3	NOx-3
		%	ppm	ppm	%	ppm	ppm
9/3/2009	16:03:48	7.773	615.02	66.66	7.787	626.79	64.3

Test Run 6 End

Final System Bias Check for Run 6 . STRATA Version 2.01

Operator:	RMC Environmental, Inc.	
Plant Name:	WMI-DFW RDF	
Location:	Engine Plant	
	Reference Cylinder Numbers	
	Zero	Span
O2-4	CX026080B	XC034274B
CO-4	XC034274B	CC10518
NOx-4	XC034274B	CX026080B
O2-3	CX026080B	XC034274B
CO-3	XC034274B	CC10518
NOx-3	XC034274B	CX026080B

Date/Time	9/3/2009	16:08:59 PASSED				
Analyte	O2-4	CO-4	NOx-4	O2-3	CO-3	NOx-3
Units	%	ppm	ppm	%	ppm	ppm
Zero Ref Cyl	0.00	0.00	0.00	0.00	0.00	0.00
Zero Cal	0.08	0.93	-0.79	0.14	2.41	0.60
Zero Avg	0.06	0.03	-0.22	0.14	-2.21	0.38
Zero Bias%	0.10	0.10	0.20	0.00	0.50	0.10
Zero Drift%	-0.10	0.00	-0.10	0.00	-0.10	-0.30
Span Ref Cyl	5.50	502.80	115.40	5.50	502.80	115.40
Span Cal	5.61	505.56	116.09	5.65	506.49	112.62
Span Avg	5.54	487.24	112.14	5.50	499.88	108.31
Span Bias%	0.30	2.00	1.60	0.70	0.70	1.70
Span Drift%	-0.10	-0.90	0.40	-0.50	0.00	0.00
Ini Zero Avg	0.07	0.06	0.09	0.14	-1.21	1.17
Ini Span Avg	5.57	495.03	111.05	5.60	500.31	108.37
Run Avg	7.77	615.02	66.66	7.79	626.79	64.30
Co	0.06	0.05	-0.07	0.14	-1.71	0.78
Cm	5.56	491.13	111.60	5.55	500.10	108.34
Correct Avg	7.72	629.63	68.96	7.77	629.74	68.15

METHOD 4 RUN SUMMARY SHEET

Company: Waste Management of Texas
Source: WMI-DFW Recycling & Disposal
Test Location: Engine #4

Load: 1600 KW

Run:	**M4-R4**	**M4-R5**	**M4-R5**
Flow Runs:	1	2	3
Start Time:	9/3/2009 12:30	9/3/2009 13:35	9/3/2009 14:42
End Time:	9/3/2009 13:30	9/3/2009 14:35	9/3/2009 15:42

RUN DATA

Meter voume start (cu. ft.):	549.692	565.591	613.328
Meter volume finish (cu. ft.):	565.429	581.478	628.660
Meter calib. factor (Y):	0.9510	0.9510	0.9510
Barometric pressure (in. Hg):	29.94	29.94	29.94
Average Delta-H (in. H2O):	1.84	1.84	1.84
Gas meter temperature (deg F):	107.0	105.0	113.0
Sil-Gel total wt. H2O collected (grams):	7.3	9.3	4.6
Impinger total volume H2O collected (ml):	32	32	40

CALCULATED RESULTS

Gas volume sampled (DSCF)*:	14.003	14.187	13.500
Water vapor volume (SCF)*:	1.850	1.944	2.099
Moisture content (% volume):	**11.7**	**12.1**	**13.5**

* 68 deg F (20 deg C) - 29.92 in. Hg

METHOD 4 RUN SUMMARY SHEET

Company: Waste Management of Texas
Source: WMI-DFW Recycling & Disposal
Test Location: Engine 1

Load: 1600 KW

Run:	**M4-R1**	**M4-R2**	**M4-R3**
Flow Runs:	1	2	3
Start Time:	9/3/2009 9:00	9/3/2009 10:10	9/3/2009 11:15
End Time:	9/3/2009 10:00	9/3/2009 11:10	9/3/2009 12:15

RUN DATA

Meter voume start (cu. ft.):	532.420	581.845	597.851
Meter volume finish (cu. ft.):	546.631	596.092	612.954
Meter calib. factor (Y):	0.9510	0.9510	0.9510
Barometric pressure (in. Hg):	29.94	29.94	29.94
Average Delta-H (in. H2O):	1.84	1.84	1.84
Gas meter temperature (deg F):	100.0	110.0	113.0
Sil-Gel total wt. H2O collected (grams):	5.7	11.2	6.1
Impinger total volume H2O collected (ml):	42	32	36

CALCULATED RESULTS

Gas volume sampled (DSCF)*:	12.808	13.407	13.298
Water vapor volume (SCF)*:	2.245	2.033	1.982
Moisture content (% volume):	**14.9**	**13.2**	**13.0**

* 68 deg F (20 deg C) - 29.92 in. Hg

VOLUMETRIC FLOW RATE DETERMINATION

Company: Waste Management of Texas
Source: WMI-DFW Recycling & Disposal
Test Location: Engine 1

Conducted By: [illegible]

Load: 1600 KW
Run: 1
Start Time: 9/3/2009 9:00
End Time: 9/3/2009 10:00

TEST DATA

Test Point	Delta P (in H2O)	Temp. (Deg F)	Test Point	Delta P (in H2O)	Temp. (Deg F)
[illegible]	2.500	929	[illegible]	3.200	932
[illegible]	3.500	929	[illegible]	3.500	932
[illegible]	3.600	929	[illegible]	3.100	932
[illegible]	3.600	929	[illegible]	2.800	932
[illegible]	3.700	929			
[illegible]	3.900	929			
[illegible]	3.200	929			
[illegible]	3.000	932			
[illegible]	3.800	932			
[illegible]	3.700	932			
[illegible]	3.500	932			
[illegible]	3.400	932			

Duct Area:	188.7	(A)	sq. inches
Barometric Pressure:	29.94	(Pbar)	inches Hg
Static Pressure:	6.80	(PG)	inches H2O
Pitot Tube Coefficient:	0.84	(Cp)	
Percent O2:	7.7	% O2	
Percent CO2:	12.0	% CO2	
Percent Nitrogen:	80.3	% N2	
Percent Moisture:	14.9	$\%H_2O$	
Average Delta P:	3.38		inches H2O
Root Mean Sq. Delta P:	3.36	(Pavg)	inches H2O
Mean Temperature:	930.7	(Ts)	Degrees F
Number Of Traverse Points:	16		

CALCULATIONS

DRY MOLE FRACTION OF STACK GAS: $Mfd = 1 - (\%H_2O / 100)$	Mfd =	0.851	
ABSOLUTE STACK GAS PRESSURE: Ps = Pbar + (Pg / 13.6)	Ps =	30.44	in. Hg
DRY MOLECULAR WEIGHT OF STACK GAS: $Md = 0.44 (\%CO_2) + 0.32 (\%O_2) + 0.28 (\%N_2)$	Md =	30.23	lb/lb-mole
WET MOLECULAR WEIGHT OF STACK GAS: $Ms = (Md)(Mfd) + 0.18 (\%H_2O)$	Ms =	28.40	lb/lb-mole
AVERAGE STACK GAS VELOCITY: $Vs = 85.49(Cp) X \{(Pavg)(Ts + 460)/[(Ps)(Ms)]\}^{0.5}$	Vs =	167.0	ft/sec
DRY VOLUMETRIC FLOW RATE: Qsd = 7.353(60)(Mfd)(Vs)(A)(Ps) / (Ts + 460)	Qsd =	4,316	DSCFM (DRY)

VOLUMETRIC FLOW RATE DETERMINATION

Company: Waste Management of Texas
Source: WMI-DFW Recycling & Disposal
Test Location: Engine 1

Conducted By: RC/AM

Load: 1600 KW
Run: 2
Start Time: 9/3/2009 10:10
End Time: 9/3/2009 11:10

TEST DATA

Test Point	Delta P (in H2O)	Temp. (Deg F)	Test Point	Delta P (in H2O)	Temp. (Deg F)
A-1	2.800	931	B-5	3.300	929
A-2	3.100	931	B-6	3.200	929
A-3	3.500	931	B-7	3.500	929
A-4	3.600	931	B-8	3.200	929
A-5	3.700	931			
A-6	3.500	931			
A-7	3.300	931			
A-8	3.200	929			
B-1	3.800	929			
B-2	3.900	929			
B-3	3.700	929			
B-4	3.400	929			

Duct Area:	188.7	(A)	sq. inches
Barometric Pressure:	29.94	(Pbar)	inches Hg
Static Pressure:	6.90	(PG)	inches H2O
Pitot Tube Coefficient:	0.84	(Cp)	
Percent O2:	7.8	% O2	
Percent CO2:	12.1	% CO2	
Percent Nitrogen:	80.1	% N2	
Percent Moisture:	13.2	$\%H_20$	
Average Delta P:	3.42		inches H2O
Root Mean Sq. Delta P:	3.41	(Pavg)	inches H2O
Mean Temperature:	929.9	(Ts)	Degrees F
Number Of Traverse Points:	16		

CALCULATIONS

DRY MOLE FRACTION OF STACK GAS: Mfd = 1 - ($\%H_2O$ / 100)	Mfd =	0.868	
ABSOLUTE STACK GAS PRESSURE: Ps = Pbar + (Pg / 13.6)	Ps =	30.45	in. Hg
DRY MOLECULAR WEIGHT OF STACK GAS: Md = 0.44 ($\%CO_2$) + 0.32 ($\%O_2$) + 0.28 ($\%N_2$)	Md =	30.25	lb/lb-mole
WET MOLECULAR WEIGHT OF STACK GAS: Ms = (Md)(Mfd) + 0.18 ($\%H_2O$)	Ms =	28.63	lb/lb-mole
AVERAGE STACK GAS VELOCITY: Vs = 85.49(Cp) X $\{(Pavg)(Ts + 460)/[(Ps)(Ms)]\}^{0.5}$	Vs =	167.5	ft/sec
DRY VOLUMETRIC FLOW RATE: Qsd = 7.353(60)(Mfd)(Vs)(A)(Ps) / (Ts + 460)	Qsd =	4,421	DSCFM (DRY)

VOLUMETRIC FLOW RATE DETERMINATION

Company: Waste Management of Texas
Source: WMI-DFW Recycling & Disposal
Test Location: Engine 1

Conducted By: RC/AM

Load: 1600 KW
Run: 3
Start Time: 9/3/2009 11:15
End Time: 9/3/2009 12:15

TEST DATA

Test Point	Delta P (in H2O)	Temp. (Deg F)	Test Point	Delta P (in H2O)	Temp. (Deg F)
A-1	2.900	938	B-5	3.400	936
A-2	2.900	938	B-6	3.200	936
A-3	3.500	938	B-7	3.200	936
A-4	3.600	938	B-8	3.300	936
A-5	3.800	938			
A-6	3.500	938			
A-7	3.400	938			
A-8	3.000	936			
B-1	3.900	936			
B-2	4.100	936			
B-3	3.700	936			
B-4	3.500	936			

Duct Area:	188.7	(A)	sq. inches
Barometric Pressure:	29.94	(Pbar)	inches Hg
Static Pressure:	6.50	(PG)	inches H2O
Pitot Tube Coefficient:	0.84	(Cp)	
Percent O2:	7.8	% O2	
Percent CO2:	12.1	% CO2	
Percent Nitrogen:	80.1	% N2	
Percent Moisture:	13.0	$\%H_2O$	
Average Delta P:	3.43		inches H2O
Root Mean Sq. Delta P:	3.42	(Pavg)	inches H2O
Mean Temperature:	936.9	(Ts)	Degrees F
Number Of Traverse Points:	16		

CALCULATIONS

DRY MOLE FRACTION OF STACK GAS: $Mfd = 1 - (\%H_2O / 100)$	Mfd =	0.870	
ABSOLUTE STACK GAS PRESSURE: Ps = Pbar + (Pg / 13.6)	Ps =	30.42	in. Hg
DRY MOLECULAR WEIGHT OF STACK GAS: $Md = 0.44 (\%CO_2) + 0.32 (\%O_2) + 0.28 (\%N_2)$	Md =	30.25	lb/lb-mole
WET MOLECULAR WEIGHT OF STACK GAS: $Ms = (Md)(Mfd) + 0.18 (\%H_2O)$	Ms =	28.66	lb/lb-mole
AVERAGE STACK GAS VELOCITY: $Vs = 85.49(Cp) X \{(Pavg)(Ts + 460)/[(Ps)(Ms)]\}^{0.5}$	Vs =	168.2	ft/sec
DRY VOLUMETRIC FLOW RATE: Qsd = 7.353(60)(Mfd)(Vs)(A)(Ps) / (Ts + 460)	Qsd =	4,422	DSCFM (DRY)

METHOD 4 RUN SUMMARY SHEET

Company: Waste Management of Texas
Source: WMI-DFW Recycling & Disposal
Test Location: Engine #2

Load: 1600 KW

Run:	**M4-R4**	**M4-R5**	**M4-R5**
Flow Runs:	1	2	3
Start Time:	9/3/2009 9:00	9/3/2009 10:10	9/3/2009 11:15
End Time:	9/3/2009 10:00	9/3/2009 11:10	9/3/2009 12:15

RUN DATA

Meter voume start (cu. ft.):	549.692	565.591	613.328
Meter volume finish (cu. ft.):	565.429	581.478	628.660
Meter calib. factor (Y):	0.9510	0.9510	0.9510
Barometric pressure (in. Hg):	29.94	29.94	29.94
Average Delta-H (in. H2O):	1.84	1.84	1.84
Gas meter temperature (deg F):	107.0	105.0	113.0
Sil-Gel total wt. H2O collected (grams):	7.3	9.3	4.6
Impinger total volume H2O collected (ml):	32	32	40

CALCULATED RESULTS

Gas volume sampled (DSCF)*:	14.003	14.187	13.500
Water vapor volume (SCF)*:	1.850	1.944	2.099
Moisture content (% volume):	**11.7**	**12.1**	**13.5**

* 68 deg F (20 deg C) - 29.92 in. Hg

VOLUMETRIC FLOW RATE DETERMINATION

Company: Waste Management of Texas
Source: WMI-DFW Recycling & Disposal
Test Location: Engine #2

Conducted By: RC/AM

Load: 1600 KW
Run: 1
Start Time: 9/3/2009 9:00
End Time: 9/3/2009 10:00

TEST DATA

Test Point	Delta P (in H2O)	Temp. (Deg F)	Test Point	Delta P (in H2O)	Temp. (Deg F)
A-1	2.950	928	B-5	3.500	939
A-2	3.310	928	B-6	3.400	939
A-3	2.200	928	B-7	3.500	939
A-4	2.800	928	B-8	3.200	939
A-5	3.700	928			
A-6	3.500	928			
A-7	3.600	928			
A-8	3.400	928			
B-1	3.600	939			
B-2	2.800	939			
B-3	3.400	939			
B-4	3.700	939			

Duct Area:	188.7	(A)	sq. inches
Barometric Pressure:	29.94	(Pbar)	inches Hg
Static Pressure:	7.20	(PG)	inches H2O
Pitot Tube Coefficient:	0.84	(Cp)	
Percent O2:	7.5	% O2	
Percent CO2:	11.5	% CO2	
Percent Nitrogen:	81.0	% N2	
Percent Moisture:	11.7	$\%H_2O$	
Average Delta P:	3.29		inches H2O
Root Mean Sq. Delta P:	3.27	(Pavg)	inches H2O
Mean Temperature:	933.5	(Ts)	Degrees F
Number Of Traverse Points:	16		

CALCULATIONS

DRY MOLE FRACTION OF STACK GAS: $Mtd = 1 - (\%H_2O / 100)$	Mfd =	0.883	
ABSOLUTE STACK GAS PRESSURE: Ps = Pbar + (Pg / 13.6)	Ps =	30.47	in. Hg
DRY MOLECULAR WEIGHT OF STACK GAS: $Md = 0.44 (\%CO_2) + 0.32 (\%O_2) + 0.28 (\%N_2)$	Md =	30.14	lb/lb-mole
WET MOLECULAR WEIGHT OF STACK GAS: $Ms = (Md)(Mfd) + 0.18 (\%H_2O)$	Ms =	28.72	lb/lb-mole
AVERAGE STACK GAS VELOCITY: $Vs = 85.49(Cp) X \{(Pavg)(Ts + 460)/[(Ps)(Ms)]\}^{0.5}$	Vs =	163.9	ft/sec
DRY VOLUMETRIC FLOW RATE: Qsd = 7.353(60)(Mfd)(Vs)(A)(Ps) / (Ts + 460)	Qsd =	4,392	DSCFM (DRY)

VOLUMETRIC FLOW RATE DETERMINATION

Company: Waste Management of Texas
Source: WMI-DFW Recycling & Disposal
Test Location: Engine #2

Conducted By: RC/AM

Load: 1600 KW
Run: 2
Start Time: 9/3/2009 10:10
End Time: 9/3/2009 11:10

TEST DATA

Test Point	Delta P (in H2O)	Temp. (Deg F)	Test Point	Delta P (in H2O)	Temp. (Deg F)
A-1	2.700	938	B-5	3.300	948
A-2	2.900	938	B-6	3.500	948
A-3	3.800	938	B-7	3.500	948
A-4	3.900	938	B-8	3.000	948
A-5	3.800	938			
A-6	3.400	938			
A-7	3.200	938			
A-8	3.100	938			
B-1	2.500	948			
B-2	3.300	948			
B-3	3.900	948			
B-4	3.800	948			

Duct Area:	188.7	(A)	sq. inches
Barometric Pressure:	29.94	(Pbar)	inches Hg
Static Pressure:	6.80	(PG)	inches H2O
Pitot Tube Coefficient:	0.84	(Cp)	
Percent O2:	7.5	% O2	
Percent CO2:	11.5	% CO2	
Percent Nitrogen:	81.0	% N2	
Percent Moisture:	12.1	$\%H_2O$	
Average Delta P:	3.35		inches H2O
Root Mean Sq. Delta P:	3.34	(Pavg)	inches H2O
Mean Temperature:	943.0	(Ts)	Degrees F
Number Of Traverse Points:	16		

CALCULATIONS

DRY MOLE FRACTION OF STACK GAS: $Mfd = 1 - (\%H_2O / 100)$	Mfd =	0.879	
ABSOLUTE STACK GAS PRESSURE: Ps = Pbar + (Pg / 13.6)	Ps =	30.44	in. Hg
DRY MOLECULAR WEIGHT OF STACK GAS: $Md = 0.44 (\%CO_2) + 0.32 (\%O_2) + 0.28 (\%N_2)$	Md =	30.14	lb/lb-mole
WET MOLECULAR WEIGHT OF STACK GAS: $Ms = (Md)(Mfd) + 0.18 (\%H_2O)$	Ms =	28.68	lb/lb-mole
AVERAGE STACK GAS VELOCITY: $Vs = 85.49(Cp) X \{(Pavg)(Ts + 460)/[(Ps)(Ms)]\}^{0.5}$	Vs =	166.3	ft/sec
DRY VOLUMETRIC FLOW RATE: Qsd = 7.353(60)(Mfd)(Vs)(A)(Ps) / (Ts + 460)	Qsd =	4,403	DSCFM (DRY)

VOLUMETRIC FLOW RATE DETERMINATION

Company: Waste Management of Texas
Source: WMI-DFW Recycling & Disposal
Test Location: Engine #2

Conducted By: RC/AM

Load: 1600 KW
Run: 3
Start Time: 9/3/2009 11:15
End Time: 9/3/2009 12:15

TEST DATA

Test Point	Delta P (in H2O)	Temp. (Deg F)	Test Point	Delta P (in H2O)	Temp. (Deg F)
A-1	2.900	942	B-5	3.400	951
A-2	3.000	942	B-6	3.200	951
A-3	3.500	942	B-7	3.000	951
A-4	3.700	942	B-8	2.800	951
A-5	3.500	942			
A-6	3.900	942			
A-7	3.500	942			
A-8	3.100	942			
B-1	3.000	951			
B-2	3.100	951			
B-3	3.600	951			
B-4	3.700	951			

Duct Area:	188.7	(A)	sq. inches
Barometric Pressure:	29.94	(Pbar)	inches Hg
Static Pressure:	6.90	(PG)	inches H2O
Pitot Tube Coefficient:	0.84	(Cp)	
Percent O2:	7.6	% O2	
Percent CO2:	11.4	% CO2	
Percent Nitrogen:	81.0	% N2	
Percent Moisture:	13.5	$\%H_2O$	
Average Delta P:	3.31		inches H2O
Root Mean Sq. Delta P:	3.30	(Pavg)	inches H2O
Mean Temperature:	946.5	(Ts)	Degrees F
Number Of Traverse Points:	16		

CALCULATIONS

DRY MOLE FRACTION OF STACK GAS: $Mfd = 1 - (\%H_2O / 100)$	Mfd =	0.865	
ABSOLUTE STACK GAS PRESSURE: Ps = Pbar + (Pg / 13.6)	Ps =	30.45	in. Hg
DRY MOLECULAR WEIGHT OF STACK GAS: $Md = 0.44 (\%CO_2) + 0.32 (\%O_2) + 0.28 (\%N_2)$	Md =	30.13	lb/lb-mole
WET MOLECULAR WEIGHT OF STACK GAS: $Ms = (Md)(Mfd) + 0.18 (\%H_2O)$	Ms =	28.50	lb/lb-mole
AVERAGE STACK GAS VELOCITY: $Vs = 85.49(Cp) X \{(Pavg)(Ts + 460)/[(Ps)(Ms)]\}^{0.5}$	Vs =	166.1	ft/sec
DRY VOLUMETRIC FLOW RATE: Qsd = 7.353(60)(Mfd)(Vs)(A)(Ps) / (Ts + 460)	Qsd =	4,316	DSCFM (DRY)

METHOD 4 RUN SUMMARY SHEET

Company: Waste Management of Texas
Source: WMI-DFW Recycling & Disposal
Test Location: Engine 3

Load: 1600 KW

Run:	**M4-R1**	**M4-R2**	**M4-R3**
Flow Runs:	1	2	3
Start Time:	9/3/2009 12:30	9/3/2009 13:35	9/3/2009 14:42
End Time:	9/3/2009 13:30	9/3/2009 14:35	9/3/2009 15:42

RUN DATA

Meter voume start (cu. ft.):	532.420	581.845	597.851
Meter volume finish (cu. ft.):	546.631	596.992	612.954
Meter calib. factor (Y):	0.9510	0.9510	0.9510
Barometric pressure (in. Hg):	29.94	29.94	29.94
Average Delta-H (in. H2O):	1.84	1.84	1.84
Gas meter temperature (deg F):	115.0	117.0	119.0
Sil-Gel total wt. H2O collected (grams):	4.8	3.9	4.2
Impinger total volume H2O collected (ml):	33	38	36

CALCULATED RESULTS

Gas volume sampled (DSCF)*:	12.474	13.245	13.160
Water vapor volume (SCF)*:	1.779	1.972	1.892
Moisture content (% volume):	**12.5**	**13.0**	**12.6**

* 68 deg F (20 deg C) - 29.92 in. Hg

VOLUMETRIC FLOW RATE DETERMINATION

Company: Waste Management of Texas
Source: WMI-DFW Recycling & Disposal
Test Location: Engine 3

Conducted By: [illegible]

Load: 1600 KW
Run: 1
Start Time: 9/3/2009 12:30
End Time: 9/3/2009 13:30

TEST DATA

Test Point	Delta P (in H2O)	Temp. (Deg F)	Test Point	Delta P (in H2O)	Temp. (Deg F)
[illegible]	2.800	948	[illegible]	3.900	952
[illegible]	3.300	948	[illegible]	3.400	952
[illegible]	3.500	948	[illegible]	3.200	952
[illegible]	3.400	948	[illegible]	3.000	952
[illegible]	3.360	948			
[illegible]	3.500	948			
[illegible]	3.800	948			
[illegible]	3.900	948			
[illegible]	3.000	952			
[illegible]	2.800	952			
[illegible]	3.300	952			
[illegible]	3.600	952			

Duct Area:	188.7	(A)	sq. inches
Barometric Pressure:	29.94	(Pbar)	inches Hg
Static Pressure:	6.80	(PG)	inches H2O
Pitot Tube Coefficient:	0.84	(Cp)	
Percent O2:	7.7	% O2	
Percent CO2:	12.2	% CO2	
Percent Nitrogen:	80.1	% N2	
Percent Moisture:	12.5	$\%H_2O$	
Average Delta P:	3.36		inches H2O
Root Mean Sq. Delta P:	3.35	(Pavg)	inches H2O
Mean Temperature:	950.0	(Ts)	Degrees F
Number Of Traverse Points:	16		

CALCULATIONS

DRY MOLE FRACTION OF STACK GAS: $Mfd = 1 - (\%H_2O / 100)$	Mfd =	0.875	
ABSOLUTE STACK GAS PRESSURE: Ps = Pbar + (Pg / 13.6)	Ps =	30.44	in. Hg
DRY MOLECULAR WEIGHT OF STACK GAS: $Md = 0.44 (\%CO_2) + 0.32 (\%O_2) + 0.28 (\%N_2)$	Md =	30.26	lb/lb-mole
WET MOLECULAR WEIGHT OF STACK GAS: $Ms = (Md)(Mfd) + 0.18 (\%H_2O)$	Ms =	28.73	lb/lb-mole
AVERAGE STACK GAS VELOCITY: $Vs = 85.49(Cp) X \{(Pavg)(Ts + 460)/[(Ps)(Ms)]\}^{0.5}$	Vs =	166.9	ft/sec
DRY VOLUMETRIC FLOW RATE: Qsd = 7.353(60)(Mfd)(Vs)(A)(Ps) / (Ts + 460)	Qsd =	4,376	DSCFM (DRY)

VOLUMETRIC FLOW RATE DETERMINATION

Company: Waste Management of Texas
Source: WMI-DFW Recycling & Disposal
Test Location: Engine 3

Conducted By: RC/AM

Load: 1600 KW
Run: 2
Start Time: 9/3/2009 13:35
End Time: 9/3/2009 14:35

TEST DATA

Test Point	Delta P (in H2O)	Temp. (Deg F)	Test Point	Delta P (in H2O)	Temp. (Deg F)
A-1	2.600	951	B-5	3.800	949
A-2	3.700	951	B-6	3.700	949
A-3	3.500	951	B-7	3.400	949
A-4	3.800	951	B-8	3.200	949
A-5	3.800	951			
A-6	3.700	951			
A-7	3.800	951			
A-8	3.900	951			
B-1	3.300	949			
B-2	3.400	949			
B-3	3.700	949			
B-4	3.900	949			

Duct Area:	188.7	(A)	sq. inches
Barometric Pressure:	29.94	(Pbar)	inches Hg
Static Pressure:	6.90	(PG)	inches H2O
Pitot Tube Coefficient:	0.84	(Cp)	
Percent O2:	7.7	% O2	
Percent CO2:	12.3	% CO2	
Percent Nitrogen:	80.0	% N2	
Percent Moisture:	13.0	$\%H_2O$	
Average Delta P:	3.58		inches H2O
Root Mean Sq. Delta P:	3.57	(Pavg)	inches H2O
Mean Temperature:	950.0	(Ts)	Degrees F
Number Of Traverse Points:	16		

CALCULATIONS

DRY MOLE FRACTION OF STACK GAS: $Mfd = 1 - (\%H_2O / 100)$	Mfd =	0.870	
ABSOLUTE STACK GAS PRESSURE: Ps = Pbar + (Pg / 13.6)	Ps =	30.45	in. Hg
DRY MOLECULAR WEIGHT OF STACK GAS: $Md = 0.44 (\%CO_2) + 0.32 (\%O_2) + 0.28 (\%N_2)$	Md =	30.28	lb/lb-mole
WET MOLECULAR WEIGHT OF STACK GAS: $Ms = (Md)(Mfd) + 0.18 (\%H_2O)$	Ms =	28.68	lb/lb-mole
AVERAGE STACK GAS VELOCITY: $Vs = 85.49(Cp) X \{(Pavg)(Ts + 460)/[(Ps)(Ms)]\}^{0.5}$	Vs =	172.3	ft/sec
DRY VOLUMETRIC FLOW RATE: Qsd = 7.353(60)(Mfd)(Vs)(A)(Ps) / (Ts + 460)	Qsd =	4,494	DSCFM (DRY)

VOLUMETRIC FLOW RATE DETERMINATION

Company: Waste Management of Texas
Source: WMI-DFW Recycling & Disposal
Test Location: Engine 3

Conducted By: RC/AM

Load: 1600 KW
Run: 3
Start Time: 9/3/2009 14:42
End Time: 9/3/2009 15:42

TEST DATA

Test Point	Delta P (in H2O)	Temp. (Deg F)	Test Point	Delta P (in H2O)	Temp. (Deg F)
A-1	2.600	949	B-5	3.600	954
A-2	3.300	949	B-6	3.800	954
A-3	3.500	949	B-7	3.400	954
A-4	3.600	949	B-8	3.100	954
A-5	3.400	949			
A-6	3.700	949			
A-7	3.800	949			
A-8	3.200	949			
B-1	3.200	954			
B-2	3.600	954			
B-3	3.800	954			
B-4	3.500	954			

Duct Area:	188.7	(A)	sq. inches
Barometric Pressure:	29.94	(Pbar)	inches Hg
Static Pressure:	6.50	(PG)	inches H2O
Pitot Tube Coefficient:	0.84	(Cp)	
Percent O2:	7.8	% O2	
Percent CO2:	12.1	% CO2	
Percent Nitrogen:	80.1	% N2	
Percent Moisture:	12.6	$\%H_2O$	
Average Delta P:	3.44		inches H2O
Root Mean Sq. Delta P:	3.44	(Pavg)	inches H2O
Mean Temperature:	951.5	(Ts)	Degrees F
Number Of Traverse Points:	16		

CALCULATIONS

DRY MOLE FRACTION OF STACK GAS: $Mtd = 1 - (\%H_2O / 100)$	Mfd =	0.874	
ABSOLUTE STACK GAS PRESSURE: Ps = Pbar + (Pg / 13.6)	Ps =	30.42	in. Hg
DRY MOLECULAR WEIGHT OF STACK GAS: $Md = 0.44 (\%CO_2) + 0.32 (\%O_2) + 0.28 (\%N_2)$	Md =	30.25	lb/lb-mole
WET MOLECULAR WEIGHT OF STACK GAS: $Ms = (Md)(Mtd) + 0.18 (\%H_2O)$	Ms =	28.71	lb/lb-mole
AVERAGE STACK GAS VELOCITY: $Vs = 85.49(Cp) X \{(Pavg)(Ts + 460)/[(Ps)(Ms)]\}^{0.5}$	Vs =	169.2	ft/sec
DRY VOLUMETRIC FLOW RATE: Qsd = 7.353(60)(Mfd)(Vs)(A)(Ps) / (Ts + 460)	Qsd =	4,424	DSCFM (DRY)

METHOD 4 RUN SUMMARY SHEET

Company: Waste Management of Texas
Source: WMI-DFW Recycling & Disposal
Test Location: Engine 3

Load: 1600 KW

Run:	**M4-R1**	**M4-R2**	**M4-R3**
Flow Runs:	1	2	3
Start Time:	9/3/2009 12:30	9/3/2009 13:35	9/3/2009 14:42
End Time:	9/3/2009 13:30	9/3/2009 14:35	9/3/2009 15:42

RUN DATA

Meter voume start (cu. ft.):	628.992	658.492	688.005
Meter volume finish (cu. ft.):	643.217	672.742	702.829
Meter calib. factor (Y):	0.9510	0.9510	0.9510
Barometric pressure (in. Hg):	29.94	29.94	29.94
Average Delta-H (in. H2O):	1.84	1.84	1.84
Gas meter temperature (deg F):	112.0	120.0	124.0
Sil-Gel total wt. H2O collected (grams):	5.1	4.8	4.2
Impinger total volume H2O collected (ml):	32	35	36

CALCULATED RESULTS

Gas volume sampled (DSCF)*:	12.552	12.396	12.807
Water vapor volume (SCF)*:	1.746	1.873	1.892
Moisture content (% volume):	**12.2**	**13.1**	**12.9**

* 68 deg F (20 deg C) - 29.92 in. Hg

VOLUMETRIC FLOW RATE DETERMINATION

Company: Waste Management of Texas
Source: WMI-DFW Recycling & Disposal
Test Location: Engine 3

Conducted By: [illegible]

Load: 1600 KW
Run: 1
Start Time: 9/3/2009 12:30
End Time: 9/3/2009 13:30

TEST DATA

Test Point	Delta P (in H2O)	Temp. (Deg F)	Test Point	Delta P (in H2O)	Temp. (Deg F)
[illegible]	2.800	948	[illegible]	3.900	952
[illegible]	3.300	948	[illegible]	3.400	952
[illegible]	3.500	948	[illegible]	3.200	952
[illegible]	3.400	948	[illegible]	3.000	952
[illegible]	3.400	948			
[illegible]	3.500	948			
[illegible]	3.800	948			
[illegible]	3.900	948			
[illegible]	3.000	952			
[illegible]	2.800	952			
[illegible]	3.300	952			
[illegible]	3.600	952			

Duct Area:	188.7	(A)	sq. inches
Barometric Pressure:	29.94	(Pbar)	inches Hg
Static Pressure:	6.80	(PG)	inches H2O
Pitot Tube Coefficient:	0.84	(Cp)	
Percent O2:	7.7	% O2	
Percent CO2:	12.2	% CO2	
Percent Nitrogen:	80.1	% N2	
Percent Moisture:	12.2	$\%H_2O$	
Average Delta P:	3.36		inches H2O
Root Mean Sq. Delta P:	3.35	(Pavg)	inches H2O
Mean Temperature:	950.0	(Ts)	Degrees F
Number Of Traverse Points:	16		

CALCULATIONS

DRY MOLE FRACTION OF STACK GAS: $Mfd = 1 - (\%H_2O / 100)$	Mfd =	0.878	
ABSOLUTE STACK GAS PRESSURE: $Ps = Pbar + (Pg / 13.6)$	Ps =	30.44	in. Hg
DRY MOLECULAR WEIGHT OF STACK GAS: $Md = 0.44 (\%CO_2) + 0.32 (\%O_2) + 0.28 (\%N_2)$	Md =	30.26	lb/lb-mole
WET MOLECULAR WEIGHT OF STACK GAS: $Ms = (Md)(Mfd) + 0.18 (\%H_2O)$	Ms =	28.76	lb/lb-mole
AVERAGE STACK GAS VELOCITY: $Vs = 85.49(Cp) X \{(Pavg)(Ts + 460)/[(Ps)(Ms)]\}^{0.5}$	Vs =	166.9	ft/sec
DRY VOLUMETRIC FLOW RATE: $Qsd = 7.353(60)(Mfd)(Vs)(A)(Ps) / (Ts + 460)$	Qsd =	4,389	DSCFM (DRY)

VOLUMETRIC FLOW RATE DETERMINATION

Company: Waste Management of Texas
Source: WMI-DFW Recycling & Disposal
Test Location: Engine 3

Conducted By: RC/AM

Load: 1600 KW
Run: 2
Start Time: 9/3/2009 13:35
End Time: 9/3/2009 14:35

TEST DATA

Test Point	Delta P (in H2O)	Temp. (Deg F)	Test Point	Delta P (in H2O)	Temp. (Deg F)
A-1	2.600	951	B-5	3.800	949
A-2	3.700	951	B-6	3.700	949
A-3	3.500	951	B-7	3.400	949
A-4	3.800	951	B-8	3.200	949
A-5	3.800	951			
A-6	3.700	951			
A-7	3.800	951			
A-8	3.900	951			
B-1	3.300	949			
B-2	3.400	949			
B-3	3.700	949			
B-4	3.900	949			

Duct Area:	188.7	(A)	sq. inches
Barometric Pressure:	29.94	(Pbar)	inches Hg
Static Pressure:	6.90	(PG)	inches H2O
Pitot Tube Coefficient:	0.84	(Cp)	
Percent O2:	7.7	% O2	
Percent CO2:	12.3	% CO2	
Percent Nitrogen:	80.0	% N2	
Percent Moisture:	13.1	$\%H_2O$	
Average Delta P:	3.58		inches H2O
Root Mean Sq. Delta P:	3.57	(Pavg)	inches H2O
Mean Temperature:	950.0	(Ts)	Degrees F
Number Of Traverse Points:	16		

CALCULATIONS

DRY MOLE FRACTION OF STACK GAS: $Mfd = 1 - (\%H_2O / 100)$	Mfd =	0.869	
ABSOLUTE STACK GAS PRESSURE: Ps = Pbar + (Pg / 13.6)	Ps =	30.45	in. Hg
DRY MOLECULAR WEIGHT OF STACK GAS: $Md = 0.44 (\%CO_2) + 0.32 (\%O_2) + 0.28 (\%N_2)$	Md =	30.28	lb/lb-mole
WET MOLECULAR WEIGHT OF STACK GAS: $Ms = (Md)(Mfd) + 0.18 (\%H_2O)$	Ms =	28.66	lb/lb-mole
AVERAGE STACK GAS VELOCITY: $Vs = 85.49(Cp) X \{(Pavg)(Ts + 460)/[(Ps)(Ms)]\}^{0.5}$	Vs =	172.4	ft/sec
DRY VOLUMETRIC FLOW RATE: Qsd = 7.353(60)(Mfd)(Vs)(A)(Ps) / (Ts + 460)	Qsd =	4,487	DSCFM (DRY)

VOLUMETRIC FLOW RATE DETERMINATION

Company: Waste Management of Texas
Source: WMI-DFW Recycling & Disposal
Test Location: Engine 3

Conducted By: RC/AM

Load: 1600 KW
Run: 3
Start Time: 9/3/2009 14:42
End Time: 9/3/2009 15:42

TEST DATA

Test Point	Delta P (in H2O)	Temp. (Deg F)	Test Point	Delta P (in H2O)	Temp. (Deg F)
A-1	2.600	949	B-5	3.600	954
A-2	3.300	949	B-6	3.800	954
A-3	3.500	949	B-7	3.400	954
A-4	3.600	949	B-8	3.100	954
A-5	3.400	949			
A-6	3.700	949			
A-7	3.800	949			
A-8	3.200	949			
B-1	3.200	954			
B-2	3.600	954			
B-3	3.800	954			
B-4	3.500	954			

Duct Area:	188.7	(A)	sq. inches
Barometric Pressure:	29.94	(Pbar)	inches Hg
Static Pressure:	6.50	(PG)	inches H2O
Pitot Tube Coefficient:	0.84	(Cp)	
Percent O2:	7.8	% O2	
Percent CO2:	12.1	% CO2	
Percent Nitrogen:	80.1	% N2	
Percent Moisture:	12.9	$\%H_2O$	
Average Delta P:	3.44		inches H2O
Root Mean Sq. Delta P:	3.44	(Pavg)	inches H2O
Mean Temperature:	951.5	(Ts)	Degrees F
Number Of Traverse Points:	16		

CALCULATIONS

DRY MOLE FRACTION OF STACK GAS: $Mfd = 1 - (\%H_2O / 100)$	Mfd =	0.871	
ABSOLUTE STACK GAS PRESSURE: Ps = Pbar + (Pg / 13.6)	Ps =	30.42	in. Hg
DRY MOLECULAR WEIGHT OF STACK GAS: $Md = 0.44 (\%CO_2) + 0.32 (\%O_2) + 0.28 (\%N_2)$	Md =	30.25	lb/lb-mole
WET MOLECULAR WEIGHT OF STACK GAS: $Ms = (Md)(Mfd) + 0.18 (\%H_2O)$	Ms =	28.67	lb/lb-mole
AVERAGE STACK GAS VELOCITY: $Vs = 85.49(Cp) X \{(Pavg)(Ts + 460)/[(Ps)(Ms)]\}^{0.5}$	Vs =	169.4	ft/sec
DRY VOLUMETRIC FLOW RATE: Qsd = 7.353(60)(Mfd)(Vs)(A)(Ps) / (Ts + 460)	Qsd =	4,412	DSCFM (DRY)

METHOD 4 RUN SUMMARY SHEET

Company: Waste Management of Texas
Source: WMI-DFW Recycling & Disposal
Test Location: Engine #4

Load: 1600 KW

Run:	**M4-R4**	**M4-R5**	**M4-R5**
Flow Runs:	1	2	3
Start Time:	9/3/2009 12:30	9/3/2009 13:35	9/3/2009 14:42
End Time:	9/3/2009 13:30	9/3/2009 14:35	9/3/2009 15:42

RUN DATA

Meter voume start (cu. ft.):	643.317	672.905	703.051
Meter volume finish (cu. ft.):	658.288	687.832	717.890
Meter calib. factor (Y):	0.9510	0.9510	0.9510
Barometric pressure (in. Hg):	29.94	29.94	29.94
Average Delta-H (in. H2O):	1.84	1.84	1.84
Gas meter temperature (deg F):	115.0	121.0	119.0
Sil-Gel total wt. H2O collected (grams):	4.8	5.9	4.6
Impinger total volume H2O collected (ml):	33	32	34

CALCULATED RESULTS

Gas volume sampled (DSCF)*:	13.136	12.962	12.930
Water vapor volume (SCF)*:	1.779	1.784	1.817
Moisture content (% volume):	**11.9**	**12.1**	**12.3**

* 68 deg F (20 deg C) - 29.92 in. Hg

VOLUMETRIC FLOW RATE DETERMINATION

Company: Waste Management of Texas
Source: WMI-DFW Recycling & Disposal
Test Location: Engine #4

Conducted By: RC/AM

Load: 1600 KW
Run: 1
Start Time: 9/3/2009 12:30
End Time: 9/3/2009 13:30

TEST DATA

Test Point	Delta P (in H2O)	Temp. (Deg F)	Test Point	Delta P (in H2O)	Temp. (Deg F)
A-1	3.000	958	B-5	3.700	947
A-2	3.200	958	B-6	3.200	947
A-3	3.100	958	B-7	3.100	947
A-4	3.300	958	B-8	2.800	947
A-5	3.300	958			
A-6	3.400	958			
A-7	3.900	958			
A-8	4.000	958			
B-1	3.200	947			
B-2	3.100	947			
B-3	3.300	947			
B-4	3.500	947			

Duct Area:	188.7	(A)	sq. inches
Barometric Pressure:	29.94	(Pbar)	inches Hg
Static Pressure:	6.90	(PG)	inches H2O
Pitot Tube Coefficient:	0.84	(Cp)	
Percent O2:	7.5	% O2	
Percent CO2:	11.5	% CO2	
Percent Nitrogen:	81.0	% N2	
Percent Moisture:	11.9	$\%H_2O$	
Average Delta P:	3.32		inches H2O
Root Mean Sq. Delta P:	3.31	(Pavg)	inches H2O
Mean Temperature:	952.5	(Ts)	Degrees F
Number Of Traverse Points:	16		

CALCULATIONS

DRY MOLE FRACTION OF STACK GAS: $Mfd = 1 - (\%H_2O / 100)$	Mfd =	0.881	
ABSOLUTE STACK GAS PRESSURE: $Ps = Pbar + (Pg / 13.6)$	Ps =	30.45	in. Hg
DRY MOLECULAR WEIGHT OF STACK GAS: $Md = 0.44 (\%CO_2) + 0.32 (\%O_2) + 0.28 (\%N_2)$	Md =	30.14	lb/lb-mole
WET MOLECULAR WEIGHT OF STACK GAS: $Ms = (Md)(Mfd) + 0.18 (\%H_2O)$	Ms =	28.69	lb/lb-mole
AVERAGE STACK GAS VELOCITY: $Vs = 85.49(Cp) X \{(Pavg)(Ts + 460)/[(Ps)(Ms)]\}^{0.5}$	Vs =	166.2	ft/sec
DRY VOLUMETRIC FLOW RATE: $Qsd = 7.353(60)(Mfd)(Vs)(A)(Ps) / (Ts + 460)$	Qsd =	4,377	DSCFM (DRY)

VOLUMETRIC FLOW RATE DETERMINATION

Company: Waste Management of Texas
Source: WMI-DFW Recycling & Disposal
Test Location: Engine #4

Conducted By: RC/AM

Load: 1600 KW
Run: 2
Start Time: 9/3/2009 13:35
End Time: 9/3/2009 14:35

TEST DATA

Test Point	Delta P (in H2O)	Temp. (Deg F)	Test Point	Delta P (in H2O)	Temp. (Deg F)
A-1	2.900	961	B-5	3.500	952
A-2	3.100	961	B-6	3.800	952
A-3	3.300	961	B-7	3.900	952
A-4	3.500	961	B-8	3.900	952
A-5	3.200	961			
A-6	3.100	961			
A-7	3.400	961			
A-8	2.800	961			
B-1	3.200	952			
B-2	3.500	952			
B-3	3.800	952			
B-4	3.700	952			

Duct Area:	188.7	(A)	sq. inches
Barometric Pressure:	29.94	(Pbar)	inches Hg
Static Pressure:	7.00	(PG)	inches H2O
Pitot Tube Coefficient:	0.84	(Cp)	
Percent O2:	7.5	% O2	
Percent CO2:	11.5	% CO2	
Percent Nitrogen:	81.0	% N2	
Percent Moisture:	12.1	$\%H_2O$	
Average Delta P:	3.41		inches H2O
Root Mean Sq. Delta P:	3.40	(Pavg)	inches H2O
Mean Temperature:	956.5	(Ts)	Degrees F
Number Of Traverse Points:	16		

CALCULATIONS

DRY MOLE FRACTION OF STACK GAS: $Mfd = 1 - (\%H_2O / 100)$	Mfd =	0.879	
ABSOLUTE STACK GAS PRESSURE: Ps = Pbar + (Pg / 13.6)	Ps =	30.45	in. Hg
DRY MOLECULAR WEIGHT OF STACK GAS: $Md = 0.44 (\%CO_2) + 0.32 (\%O_2) + 0.28 (\%N_2)$	Md =	30.14	lb/lb-mole
WET MOLECULAR WEIGHT OF STACK GAS: $Ms = (Md)(Mfd) + 0.18 (\%H_2O)$	Ms =	28.67	lb/lb-mole
AVERAGE STACK GAS VELOCITY: $Vs = 85.49(Cp) X \{(Pavg)(Ts + 460)/[(Ps)(Ms)]\}^{0.5}$	Vs =	168.8	ft/sec
DRY VOLUMETRIC FLOW RATE: Qsd = 7.353(60)(Mfd)(Vs)(A)(Ps) / (Ts + 460)	Qsd =	4,425	DSCFM (DRY)

VOLUMETRIC FLOW RATE DETERMINATION

Company: Waste Management of Texas
Source: WMI-DFW Recycling & Disposal
Test Location: Engine #4

Conducted By: RC/AM

Load: 1600 KW
Run: 3
Start Time: 9/3/2009 14:42
End Time: 9/3/2009 15:42

TEST DATA

Test Point	Delta P (in H2O)	Temp. (Deg F)	Test Point	Delta P (in H2O)	Temp. (Deg F)
A-1	3.200	951	B-5	3.200	959
A-2	3.400	951	B-6	3.000	959
A-3	3.500	951	B-7	2.800	959
A-4	3.500	951	B-8	2.700	959
A-5	3.700	951			
A-6	3.800	951			
A-7	3.900	951			
A-8	3.800	951			
B-1	2.800	959			
B-2	2.900	959			
B-3	3.300	959			
B-4	3.400	959			

Duct Area:	188.7	(A)	sq. inches
Barometric Pressure:	29.94	(Pbar)	inches Hg
Static Pressure:	6.70	(PG)	inches H2O
Pitot Tube Coefficient:	0.84	(Cp)	
Percent O2:	7.6	% O2	
Percent CO2:	11.4	% CO2	
Percent Nitrogen:	81.0	% N2	
Percent Moisture:	12.3	$\%H_2O$	
Average Delta P:	3.31		inches H2O
Root Mean Sq. Delta P:	3.30	(Pavg)	inches H2O
Mean Temperature:	955.0	(Ts)	Degrees F
Number Of Traverse Points:	16		

CALCULATIONS

DRY MOLE FRACTION OF STACK GAS: $Mfd = 1 - (\%H_2O / 100)$	Mfd =	0.877	
ABSOLUTE STACK GAS PRESSURE: $Ps = Pbar + (Pg / 13.6)$	Ps =	30.43	in. Hg
DRY MOLECULAR WEIGHT OF STACK GAS: $Md = 0.44 (\%CO_2) + 0.32 (\%O_2) + 0.28 (\%N_2)$	Md =	30.13	lb/lb-mole
WET MOLECULAR WEIGHT OF STACK GAS: $Ms = (Md)(Mfd) + 0.18 (\%H_2O)$	Ms =	28.63	lb/lb-mole
AVERAGE STACK GAS VELOCITY: $Vs = 85.49(Cp) X \{(Pavg)(Ts + 460)/[(Ps)(Ms)]\}^{0.5}$	Vs =	166.1	ft/sec
DRY VOLUMETRIC FLOW RATE: $Qsd = 7.353(60)(Mfd)(Vs)(A)(Ps) / (Ts + 460)$	Qsd =	4,346	DSCFM (DRY)

APPENDIX C. TEST QA/ QC FORMS

Calibration Gas Certificates of Analysis

Meterbox Calibrations

Pitot Calibrations

PreTest Meterbox Audit

Plant: Waste Management of Texas
Location: DFW-RDF

Test Date: 9/3/2009
Auditor: AM
Project #: 2009-15930

Meterbox I.D.:	RMC002	**Level Manometer:**	Yes
Gamma:	0.951	**Zero Manometer:**	Yes
Delta H@	1.840	**Barometric Pressure:**	29.94

	Audit Time (Min)	Dry Gas Meter Reading (Ft^3)	Dry Gas Meter Temperature (^oF)
Initial Readings =	0.0	532.420	99
Final Readings =	5.0	536.348	100

Run Time (Minutes) **Theta** =	5
Gas Volume Sampled V_m =	3.9280
Average T_m =	99.5

	Audit Gamma Limits
Lower Gamma Limit **LGL**=	*0.96 * Y =* 0.913
Upper Gamma Limit **UGL**=	*1.04 * Y =* 0.989

Audit Gamma Y_c =	**0.9824**
Meter Box Audit =	**Passed**

Ideal Sampling Rate = 0.75

$$Y_c = (Theta / V_m) * [\{(29.92 / (460 + 68) * 0.75^2) * (T_m + 460)\} / P_{bar}]^{0.5}$$

Passed = $LGL < Y_c < UGL$

Failed = $LGL > Y_c$ *or* $Y_c > UGL$

Audit Performed By: AC

1st 5 min of Run #1 M4

RMC Environmental, Inc.

NO2-NO CONVERSION EFFICIENCY

RMCEInc-Air Monitoring Division

Manufacture/ Model: TECO 42i-HL
Serial Number: 42iHL-ANSBPCC

Instrument Span: 250
Date Of Test: 9/3/2009

RESULTS			
NOx Response:	44.27	Peak response recorded during converter efficiency test:	22.54 ppm
NO Response:	0.15	Response recorded at the end of the 30-minute test:	22.09 ppm
NO2 Response:	44.12	Percent decrease from the peak response:	2.00%
Converter Efficiency:	**99.82 %**	**Converter Efficiency:**	**98.00%**

SPECIFICATIONS (EPA METHOD 7E): RESPONSE AT 30 MINUTES MUST NOT DECREASE BY MORE THAN 2% OF THE PEAK RESPONSE VALUE.

NO2-NO CONVERTER EFFICIENCY TEST PROCEDURES

RMCEInc-AMD followed the manufacturer's recommended set-up procedures contained in the analyzer manual. After the initial set-up procedures were completed, the electronics of the monitor were adjusted according to the manufacturer's guidelines. The monitor was then calibrated by flowing NO calibration gases into the instrument. A calibration gas was then diluted (1:1) with purified compressed air. The gas mixture was routed through a manifold into a Tedlar bag, which was previously leak tested and evacuated. This arrangement afforded sufficient volume to allow the sampling system to operate for the required 30 minutes. Immediately after the bag was filled, the manifold was connected to the sampling system. The system was turned on and the analyzer response was recorded on a data acquisition system. The one minute averages from the data acquisition system was analyzed for the peak response and the response at the end of the 30-minute sampling period.

NO2-NO CONVERSION EFFICIENCY

RMCEInc-Air Monitoring Division

Manufacture/ Model: TECO 42H
Serial Number: 42H-42739-267

Instrument Span: 250
Date Of Test: 9/2/09

RESULTS			
NOx Response:	43.15	Peak response recorded during converter efficiency test:	25.24 ppm
NO Response:	0.25	Response recorded at the end of the 30-minute test:	25.08 ppm
NO2 Response:	42.9	Percent decrease from the peak response:	0.6%
Converter Efficiency:	**97.06 %**	**CONVERTER EFFICIENCY:**	**99.37%**

SPECIFICATIONS (EPA METHOD 20): RESPONSE AT 30 MINUTES MUST NOT DECREASE BY MORE THAN 2% OF THE PEAK RESPONSE VALUE.

NO2-NO CONVERTER EFFICIENCY TEST PROCEDURES

RMCEInc-AMD followed the manufacturer's recommended set-up procedures contained in the analyzer manual. After the initial set-up procedures were completed, the electronics of the monitor were adjusted according to the manufacturer's guidelines. The monitor was then calibrated by flowing NO calibration gases into the instrument. A calibration gas was then diluted (1:1) with purified compressed air. The gas mixture was routed through a manifold into a Tedlar bag, which was previously leak tested and evacuated. This arrangement afforded sufficient volume to allow the sampling system to operate for the required 30 minutes. Immediately after the bag was filled, the manifold was connected to the sampling system. The system was turned on and the analyzer response was recorded on a data acquisition system. The one minute averages from the data acquisition system was analyzed for the peak response and the response at the end of the 30-minute sampling period.

S-TYPE PITOT TUBE INSPECTION

Project Number	**2009-15930**		
Pitot Tube Number	**M2-36-2**		
Level	Y	(Y/N)	PASS
Obstructions	N	(Y/N)	PASS
Damaged	N	(Y/N)	PASS
Type of material	SS		
-10 < alpha1 < +10	0.5	Degrees	PASS
-10 < alpha2 < +10	0.5	Degrees	PASS
-5 < Beta1 < +5	0.0	Degrees	PASS
-5 < Beta2 < +5	0.0	Degrees	PASS
z or Gamma	0.0	Degrees	
w or Theta	0.5	Degrees	
A	0.795	Inches	
{z = A Tan (Gamma)} < 0.125	0.004	Inches	PASS
{w = A Tan (Theta)} < 0.03125	0.008	Inches	PASS
$0.1875 < D_t < 0.375$	0.375	Inches	PASS
$1.05\ D_t < P_a < 1.5\ D_t$	0.395	Inches	PASS
$1.05\ D_t < P_b < 1.5\ D_t$	0.394	Inches	PASS
$\lvert P_a - P_b \rvert < 0.0625$	0.001	Inches	PASS
Distance T/C set back > 2.0	2.440	Inches	PASS

alpha1 & alpha 2	are the angles of deflection that faces of the pitot tube are off from the perpendicular line of the traverse axis.
Beta1 & Beta2	are the angles of deflection that faces of the pitot tube from the line parallel to the longitudinal tube axis.
Gamma	is the angle between the line between the two pitot tips and the theoretical level line between the tips.
Theta	is the angle between the two center lines of the pitot faces.
A	is the distance between the two pitot tips.
z	is the distance between the two lengths of the pitot tips.
w	is the distance between the two center lines of each of the pitot tubes.
D_t	is the outside diameter of the tubing used.
P_a & P_b	is the distance between the pitot tube face and the longitudinal tube axis.

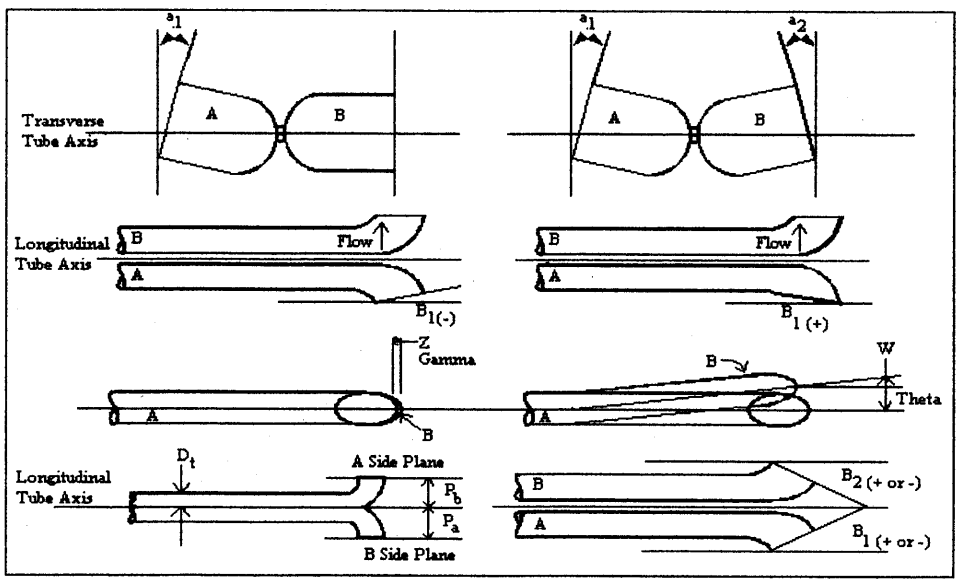

COMMENTS: 36" pitot used on Bgm 1-4

I certify that this pitot tube meets or exceeds all specifications, criteria and/ or applicable design features and is hereby assigned a pitot tube calibration factor of 0.84.

Signature: [signature]

Date: 9/3/09

RMC ENvironmental, Inc.

APPENDIX D. PROCESS DATA

PROCESS DATA FOR LFG ENGINES 1-4

Company: WMI-DFW RDF ENGINE Plant Date: 9/3/2009
Source: Engines 1-4

Start Time		KW	Fuel Flow	Air Flow	BTU	CH4 %	CO2 %	O2 %	ENGINE #
900	Run 1	1599	566	4166	472	46.7	39.7	1.4	1
915		1598	572	4170	472				1
930		1597	570	4201	472				1
945		1609	575	4199	472				1
1010	Run 2	1582	575	4241	472	46.7	39.7	1.4	1
1025		1588	567	4209	472				1
1040		1681	575	4251	472				1
1055		1604	570	4205	472				1
1115	Run 3	1643	569	4219	472	46.7	39.7	1.4	1
1130		1639	573	4224	472				1
1145		1580	575	4175	472				1
1200		1601	570	4205	472				1
	AVERAGE	1610	571	4205	472	46.7	39.7	1.4	
900	Run 1	1628	610	4321	472	46.7	39.7	1.4	2
915		1651	621	4394	472				2
930		1629	625	4345	472				2
945		1608	615	4292	472				2
1010	Run 2	1635	620	4480	472	46.7	39.7	1.4	2
1025		1640	630	4472	472				2
1040		1611	632	4398	472				2
1055		1581	626	4421	472				2
1115	Run 3	1621	618	4391	472	46.7	39.7	1.4	2
1130		1613	615	4421	472				2
1145		1608	620	4390	472				2
1200		1568	621	4415	472				2
	AVERAGE	1616	621	4395	472	46.7	39.7	1.4	

Start Time		KW	Fuel Flow	Air Flow	BTU	CH4 %	CO2 %	O2 %	ENGINE #
1230	Run 1	1608	614	4342	478	47.3	40.2	1.1	3
1245		1618	618	4361	478				3
1300		1633	612	4335	478				3
1315		1611	610	4328	478				3
1335	Run 2	1603	602	4406	478	47.3	40.2	1.1	3
1350		*1618*	*615*	4353	482				3
1405		1644	612	4381	482				3
1420		1608	614	4342	482				3
1442	Run 3	1592	614	4372	481	47.3	40.2	1.1	3
1457		1615	612	4350	481				3
1530		1610	610	4361	481				3
1500		1608	608	4321	481				3
	AVERAGE	1614	612	4354	480	47.3	40.2	1.1	
1230	Run 1	1602	615	4420	478	47.3	40.2	1.1	4
1245		1693	620	4371	478				4
1300		1614	610	4335	478				4
1315		1589	607	4364	478				4
1335	Run 2	1614	612	4375	480	47.3	40.2	1.1	4
1350		1694	610	4361	480				4
1405		1632	617	4367	480				4
1420		1621	611	4360	480				4
1442	Run 3	1626	620	4399	481	47.3	40.2	1.1	4
1457		1597	616	4365	481				4
1530		1615	611	4371	481				4
1500		1590	648	4381	481				4
	AVERAGE	1624	616	4372	480	47.3	40.2	1.1	

8210 Mosley Rd.
Houston, TX 77075
713 943-9776 Telephone
713 943-3846 Facsimile

CORE LABORATORIES

RACHEL CHLEBOROWICZ
RMC ENVIRONMENTAL INC
9226 N 2ND STREET
MACHESNEY PARK IL 61115

Date Reported: 9/10/2009
Date Received: 9/8/2009

Analytical Report

Test	Result	Units	Method	Date	Analyst
Sample Number: 192758-002	**Sample ID:**	**Sample #E-1 LFG Engines**			**Sample Rcvd:**
Sample Date: 9/3/2009 10:40:00 AM	**Description:**				9/8/2009
Ultimate Analysis					
Hydrogen	0.15	Mol %	ASTM D-1945	9/9/2009	KTN
Helium	< 0.05	Mol %			
Oxygen	0.79	Mol %	GPA 2261-95		
Nitrogen	11.98	Mol %			
Carbon Dioxide	39.21	Mol %			
Methane	47.53	Mol %			
Ethane	< 0.01	Mol %			
Propane	< 0.01	Mol %			
Isobutane	< 0.01	Mol %			
n-Butane	< 0.01	Mol %			
Isopentane	< 0.01	Mol %			
n-Pentane	< 0.01	Mol %			
Hexanes Plus	0.34	Mol %			
Total	100.00	Mol %			
Molar Mass Ratio	0.99457		GPA 2172-96		
Relative Density	0.99676				
Compressibility Factor	0.99712				
Gross Heating Value (Dry)	497.8	BTU/CF (Ideal			
Gross Heating Value (Dry)	499.2	BTU/CF (Real			
Net Heating Value	448.6	BTU/CF (Ideal			
Net Heating Value	449.9	BTU/CF (Real			
F-Factor @ 20C & 29.92in.	9580	dscf/mmBTU			
Pressure Base	14.696	psia			
Carbon	37.08	Wt %			
Hydrogen	6.84	Wt %			
Oxygen	44.43	Wt %			
Nitrogen	11.65	Wt %			
Sulfur	< 0.01	Wt %			

Avg = 9,552

The analytical results, opinions or interpretations contained in this report are based upon information and material supplied by the client for whose exclusive and confidential use this report has been made. The analytical results, opinions or interpretations expressed represent the best judgment of Core Laboratories. Core Laboratories, however, makes no warranty or representation, express or implied, of any type, and expressly disclaims same as to the productivity, proper operations or profitableness of any oil, gas, coal, or other mineral, property, well or sand in connection with which such report is used or relied upon for any reason whatsoever. This report shall not be reproduced, in whole or in part, without the written approval of Core Laboratories.

8210 Mosley Rd.
Houston, TX 77075
713 943-9776 Telephone
713 943-3846 Facsimile

CORE LABORATORIES

RACHEL CHILEBOROWICZ
RMC ENVIRONMENTAL INC
9226 N 2ND STREET
MACHESNEY PARK IL 61115

Date Reported: 9/10/2009
Date Received: 9/8/2009

Analytical Report

Test	Result	Units	Method	Date	Analyst
Sample Number: 192758-003	**Sample ID:**	**Sample #E-2 LFG Engines**			**Sample Rcvd:**
Sample Date: 9/3/2009 10:42:00 AM	**Description:**				9/8/2009
Ultimate Analysis					
Hydrogen	0.13	Mol %	ASTM D-1945	9/9/2009	KTN
Helium	< 0.05	Mol %			
Oxygen	1.74	Mol %	GPA 2261-95		
Nitrogen	13.63	Mol %			
Carbon Dioxide	38.16	Mol %			
Methane	46.30	Mol %			
Ethane	< 0.01	Mol %			
Propane	< 0.01	Mol %			
Isobutane	< 0.01	Mol %			
n-Butane	< 0.01	Mol %			
Isopentane	< 0.01	Mol %			
n-Pentane	< 0.01	Mol %			
Hexanes Plus	0.04	Mol %			
Total	100.00	Mol %			
Molar Mass Ratio	0.98871		GPA 2172-96		
Relative Density	0.99072				
Compressibility Factor	0.99729				
Gross Heating Value (Dry)	470.1	BTU/CF (Ideal			
Gross Heating Value (Dry)	471.4	BTU/CF (Real			
Net Heating Value	423.3	BTU/CF (Ideal			
Net Heating Value	424.4	BTU/CF (Real			
F-Factor @ 20C & 29.92in.	9560	dscf/mmBTU			
Pressure Base	14.696	psia			
Carbon	35.53	Wt %			
Hydrogen	6.55	Wt %			
Oxygen	44.59	Wt %			
Nitrogen	13.33	Wt %			
Sulfur	< 0.01	Wt %			

The analytical results, opinions or interpretations contained in this report are based upon information and material supplied by the client for whose exclusive and confidential use this report has been made. The analytical results, opinions or interpretations expressed represent the best judgment of Core Laboratories. Core Laboratories, however, makes no warranty or representation, express or implied, of any type, and expressly disclaims same as to the productivity, proper operations or profitableness of any oil, gas, coal, or other mineral, property, well or sand in connection with which such report is used or relied upon for any reason whatsoever. This report shall not be reproduced, in whole or in part, without the written approval of Core Laboratories.

8210 Mosley Rd.
Houston, TX 77075
713 943-9776 Telephone
713 943-3846 Facsimile

CORE LABORATORIES

RACHEL CHLEBOROWICZ
RMC ENVIRONMENTAL INC
9226 N 2ND STREET
MACHESNEY PARK IL 61115

Date Reported: 9/10/2009
Date Received: 9/8/2009

Analytical Report

Test	Result	Units	Method	Date	Analyst
Sample Number: 192758-004	**Sample ID:**	**Sample #E-3 LFG Engines**			**Sample Rcvd:** 9/8/2009
Sample Date: 9/3/2009 2:05:00 PM	**Description:**				
Ultimate Analysis					
Hydrogen	0.14	Mol %	ASTM D-1945	9/9/2009	KTN
Helium	< 0.05	Mol %			
Oxygen	1.18	Mol %	GPA 2261-95		
Nitrogen	10.53	Mol %			
Carbon Dioxide	39.98	Mol %			
Methane	48.12	Mol %			
Ethane	< 0.01	Mol %			
Propane	< 0.01	Mol %			
Isobutane	< 0.01	Mol %			
n-Butane	< 0.01	Mol %			
Isopentane	< 0.01	Mol %			
n-Pentane	< 0.01	Mol %			
Hexanes Plus	0.05	Mol %			
Total	100.00	Mol %			
Molar Mass Ratio	0.99060		GPA 2172-96		
Relative Density	0.99277				
Compressibility Factor	0.99713				
Gross Heating Value (Dry)	489.0	BTU/CF (Ideal			
Gross Heating Value (Dry)	490.4	BTU/CF (Real			
Net Heating Value	440.3	BTU/CF (Ideal			
Net Heating Value	441.6	BTU/CF (Real			
F-Factor @ 20C & 29.92in.	9539	dscf/mmBTU			
Pressure Base	14.696	psia			
Carbon	37.01	Wt %			
Hydrogen	6.80	Wt %			
Oxygen	45.91	Wt %			
Nitrogen	10.28	Wt %			
Sulfur	< 0.01	Wt %			

The analytical results, opinions or interpretations contained in this report are based upon information and material supplied by the client for whose exclusive and confidential use this report has been made. The analytical results, opinions or interpretations expressed represent the best judgment of Core Laboratories. Core Laboratories, however, makes no warranty or representation, express or implied, of any type, and expressly disclaims same as to the productivity, proper operations or profitableness of any oil, gas, coal, or other mineral, property, well or sand in connection with which such report is used or relied upon for any reason whatsoever. This report shall not be reproduced, in whole or in part, without the written approval of Core Laboratories.

8210 Mosley Rd.
Houston, TX 77075
713 943-9776 Telephone
713 943-3846 Facsimile

CORE LABORATORIES

RACHEL CHLEBOROWICZ
RMC ENVIRONMENTAL INC
9226 N 2ND STREET
MACHESNEY PARK IL 61115

Date Reported: 9/10/2009
Date Received: 9/8/2009

Analytical Report

Test	Result	Units	Method	Date	Analyst
Sample Number: 192758-005	**Sample ID:**	**Sample #E-4 LFG Engines**			**Sample Rcvd:**
Sample Date: 9/3/2009 2:10:00 PM	**Description:**				9/8/2009
Ultimate Analysis					
Hydrogen	0.15	Mol %	ASTM D-1945	9/9/2009	KTN
Helium	< 0.05	Mol %			
Oxygen	1.24	Mol %	GPA 2261-95		
Nitrogen	10.41	Mol %			
Carbon Dioxide	39.92	Mol %			
Methane	48.21	Mol %			
Ethane	< 0.01	Mol %			
Propane	< 0.01	Mol %			
Isobutane	< 0.01	Mol %			
n-Butane	< 0.01	Mol %			
Isopentane	< 0.01	Mol %			
n-Pentane	< 0.01	Mol %			
Hexanes Plus	0.07	Mol %			
Total	100.00	Mol %			
Molar Mass Ratio	0.99033		GPA 2172-96		
Relative Density	0.99251				
Compressibility Factor	0.99713				
Gross Heating Value (Dry)	491.0	BTU/CF (Ideal			
Gross Heating Value (Dry)	492.4	BTU/CF (Real			
Net Heating Value	442.1	BTU/CF (Ideal			
Net Heating Value	443.4	BTU/CF (Real			
F-Factor @ 20C & 29.92in.	9528	dscf/mmBTU			
Pressure Base	14.696	psia			
Carbon	37.09	Wt %			
Hydrogen	6.82	Wt %			
Oxygen	45.92	Wt %			
Nitrogen	10.17	Wt %			
Sulfur	< 0.01	Wt %			

The analytical results, opinions or interpretations contained in this report are based upon information and material supplied by the client for whose exclusive and confidential use this report has been made. The analytical results, opinions or interpretations expressed represent the best judgment of Core Laboratories. Core Laboratories, however, makes no warranty or representation, express or implied, of any type, and expressly disclaims same as to the productivity, proper operations or profitableness of any oil, gas, coal, or other mineral, property, well or sand in connection with which such report is used or relied upon for any reason whatsoever. This report shall not be reproduced, in whole or in part, without the written approval of Core Laboratories.

8210 Mosley Rd.
Houston, TX 77075
713 943-9776 Telephone
713 943-3846 Facsimile

CORE LABORATORIES

RACHEL CHLEBOROWICZ
RMC ENVIRONMENTAL INC
9226 N 2ND STREET
MACHESNEY PARK IL 61115

Date Reported: 9/10/2009
Date Received: 9/8/2009

Analytical Report

Test	Result	Units	Method	Date	Analyst

Approved By: M. Jean Waits
Supervising Chemist

The analytical results, opinions or interpretations contained in this report are based upon information and material supplied by the client for whose exclusive and confidential use this report has been made. The analytical results, opinions or interpretations expressed represent the best judgment of Core Laboratories. Core Laboratories, however, makes no warranty or representation, express or implied, of any type, and expressly disclaims same as to the productivity, proper operations or profitableness of any oil, gas, coal, or other mineral, property, well or sand in connection with which such report is used or relied upon for any reason whatsoever. This report shall not be reproduced, in whole or in part, without the written approval of Core Laboratories.

CORE LABORATORIES

No. 24708

CHAIN OF CUSTODY RECORD

Core Lab
RESERVOIR OPTIMIZATION
8210 Mosley Road
Houston, Texas 77075
Phone: 713-943-9776
Fax: 713-943-3846

CUSTOMER INFORMATION

COMPANY: RMC Environmental, Inc
SEND REPORT TO: R. Chleborowicz
ADDRESS: 9226 N. 2nd St.
Machesney Pk, IL 61115
PHONE: 815-378-6150
FAX: RMCEQ AirMonitoring.com

PROJECT INFORMATION

PROJECT NAME/NUMBER: 2009-15028

BILLING INFORMATION

BILL TO: RMC Env, Inc
ADDRESS: PO Box 2131
Atlantic Beach, NC 28512
PHONE: 815-378-6150
FAX: 815-425-1102
PO NO.:

LAB JOB NO.

SAMPLE NO.	SAMPLE DESCRIPTION	SAMPLE DATE	SAMPLE TIME	SAMPLE MATRIX	CONTAINER	PRESERV.	NUMBER OF CONTAINERS	F-Factor Det	Wet Fuel Analysis GPA-2261/2286	REMARKS / PRECAUTIONS
T-1	LFG-Turbine 2	9/3/09	7:40	LFG	2042		1	✓	✓	
E-1	LFG - Engines -	9/3/09	1040	LFG	2043		1	✓	✓	
E-2	"	9/3/09	1042	LFG	1965		1	✓	✓	
E-3	"	9/3/09	1405	LFG	2049		1	✓	✓	
E-4	"	9/3/09	1410	LFG	2048		1	✓	✓	

SAMPLER: R. Chleborowicz
SHIPMENT METHOD: Fedex Gd.
AIRBILL NO.:

REQUIRED TURNAROUND:* ☐ SAME DAY ☐ 24 HOURS ☐ 48 HOURS ☐ 72 HOURS ☐ 5 DAYS ☐ 10 DAYS ☑ ROUTINE OTHER

1. RELINQUISHED BY:	DATE	2. RELINQUISHED BY:	DATE	3. RELINQUISHED BY:	DATE
SIGNATURE: [signature]	9/3/09	SIGNATURE:		SIGNATURE:	
PRINTED NAME/COMPANY: R. Chleborowicz / RMCEnv, Inc	TIME 1605	PRINTED NAME/COMPANY:	TIME	PRINTED NAME/COMPANY:	TIME
1. RECEIVED BY:	DATE	2. RECEIVED BY:	DATE	3. RECEIVED BY:	DATE
SIGNATURE: [signature]	9-8-09	SIGNATURE:		SIGNATURE:	
PRINTED NAME/COMPANY: Roy Baldwin / Core Lab	TIME 0930	PRINTED NAME/COMPANY:	TIME	PRINTED NAME/COMPANY:	TIME

FAST TURNAROUND MAY REQUIRE SURCHARGE

ORIGINAL