PERFORMANCE TESTING
December 2009

As Defined By The
Title 40 Code of Federal Regulations Part 60 & Title 30 TAC §117.435(f)

RMCEINC Project #2009-16797

WASTE MANAGEMENT OF TEXAS, INC.
AUSTIN GAS PLANT
AUSTIN, TEXAS

FOUR INTERNAL COMBUSTION ENGINES
(FINs: ENG01, ENG02, ENG03, ENG04)

PREPARED FOR:
WASTE MANAGEMENT OF TEXAS, INC.
Waste Management Renewable Energy

BY:

RMC ENVIRONMENTAL, INC. – CHICAGO REGIONAL OFFICE

REPORT CERTIFICATION

The sampling, analysis, and data collection performed for this report were carried out under my direction and supervision, and I hereby certify that the test report is authentic and accurate, to the best of my knowledge.

Date 1/10/10

Signature

Rachel Chleborowicz, QSTI
Project Manager
RMC ENVIRONMENTAL, INC.

TABLE OF CONTENTS

1.0 PROJECT INFORMATION **1**

1.1 COMPANY INFORMATION 1
1.2 TESTING FIRM INFORMATION 1
1.3 TEST INFORMATION 1

2.0 SOURCE IDENTIFICATION **1**

3.0 SUMMARY AND DISCUSSION OF RESULTS **2**

4.0 POLLUTANTS AND TEST METHODS **3**

5.0 TEST PROCEDURES AND RESULTS **3**

5.10 SAMPLING PROCEDURES 3

6.0 EQUIPMENT CALIBRATION AND QUALITY ASSURANCE **6**

APPENDIX A. TEST SUMMARY SHEETS

Emissions Summary

APPENDIX B. FIELD TEST DATA W/ INSTRUMENTAL TEST DATA

Method 1-4 Field Data
Flow Rate Determinations
Calibration Summaries
Instrumental Test Run Data
Reference Data Summary

APPENDIX C. TEST QA/ QC FORMS

Calibration Gas Certificates of Analysis
Meterbox Calibrations
Pitot Calibrations

APPENDIX D. PROCESS DATA

1.0 PROJECT INFORMATION

1.1 Company Information

Name and Address:	Waste Management of Texas, Inc. Austin Gas Plant 9900 Giles Road Austin, Texas 78754
Contact:	Steven Korsgaard
Telephone Number:	512-272-4356
Permit Number:	
Source Tested:	Four IC Engines (FINs: ENG01, ENG02, ENG03, ENG04) – Landfill Gas Treatment / Electric Generating Plant

1.2 Testing Firm Information

Name and Address:	RMC ENVIRONMENTAL, INC. 9226 North 2nd Street Machesney Park, Illinois 61115
Contact:	Rachel Chleborowicz
Telephone Number:	815-378-6150 Mobile 815-425-1102 Fax RMCE@AirMonitoring.com / RMCEInc@aol.com

1.3 Test Information

Test Requested By:	Waste Management of Texas, Inc. – Austin Gas Plant	
Source Contact:	Steven Korsgaard	
Telephone Number:	512-272-4356	
Test Objective:	IC Engine 16,000 hour Continuous Compliance Verification Testing	
Test Methods:	EPA Methods 1-4, 3A, and 7E	
Test Dates:	December 7th and 8th, 2009	
Source Test Coordinators:	Phillip Keim	Waste Management of Texas, Inc.
Test Personnel:	Rachel Chleborowicz Andrew McDermand	RMCEInc RMCEInc
Additional Personnel:	Edmund Hoelker	Waste Management
Laboratory Analysis:	Core Laboratories	

2.0 SOURCE IDENTIFICATION

Name and Address:	Waste Management of Texas, Inc. Austin Gas Plant 9900 Giles Road Austin, Texas 78754
Contact:	Steven Korsgaard
Telephone Number:	512-272-4356

Source Tested:	Four IC Engines – Landfill Gas Treatment / Electric Generating Plant
Fuel:	Landfill Gas
Duct Dimensions:	Height 12' ID – 16"
Sampling Location:	~ 60" Downstream and ~ 48" Upstream from any flow disturbance

- Senior Project Manager works directly with the site coordinator and the facility's operators during the testing to coordinate the testing. They are also responsible for operating and monitoring the instrumental test methods within the mobile test laboratory.
- Project Manager conducts, manages and/or supervises the wet test methods conducted at the sample location.
- The Site Coordinator is the facility's representative for the test program.

The individuals listed within above account for nearly 35 years of accumulative experience in the stack testing industry. Their experience expands nearly every state in the United States. It also includes most source categories such as aerospace facilities, waste incinerators, hazardous waste incinerators, trash incinerators, medical waste incinerators, crematories, cement kilns, paper mills, steel mills, combined cycle power plants, simple cycle power plants, coal fired power plants, Waste-to-energy facilities, natural gas compressor stations, diesel engines, ethanol plants, petro-chemical facilities and oil refineries.

3.0 SUMMARY AND DISCUSSION OF RESULTS

The compliance testing results for Waste Management, Inc. – Austin Gas Plant are shown in **Table 3-1**. The indicated pollutants are NOx emissions in unit of the emission rate (lb/Mw-Hr). The reference test data are enclosed in **Appendices A & B** and the corresponding process data collected from the engine operations screen and the on-site Gas Chromatograph (GC) are included in **Appendix D**.

This data is an average of the three one-hour test runs conducted on each engine. Each engine is rated for 2233 horsepower with ~1600 Kw of power produced. The testing was conducted at > 90 % of the maximum capacity for each engine.

Table 3-1. Compliance Test Results

12/7 & 8/ 2009

Parameter	Result	Standard Permit Limit
Engine #1 [FIN:ENG01] – 12/7/09		
Engine #1 – NOx	1.34 lb/Mw-Hr	1.9 lb NOx / Mw-Hr
Engine #2 [FIN:ENG02] – 12/8/09		
Engine #2 – NOx	1.23 lb/Mw-Hr	1.9 lb NOx / Mw-Hr
Engine #3 [FIN:ENG03] – 12/8/09		
Engine #3 – NOx	1.63 lb/Mw-Hr	1.9 lb NOx / Mw-Hr
Engine #4 [FIN:ENG04] – 12/7/09		
Engine #4 – NOx	1.52 lb/Mw-Hr	1.9 lb NOx / Mw-Hr

4.0 POLLUTANTS AND TEST METHODS

Pollutant Tested:	NO_x	EPA Method 7E – Title 40 CFR 60, Appendix A

5.0 TEST PROCEDURES AND RESULTS

5.10 Sampling Procedures

Testing was completed per EPA Test Methods 1, 2, 3A, 4 and 7E defined in Title 40 CFR Part 60 Appendix A.

5.11 Volumetric Flow Rates

RMCEINC determined the number and location of the traverse points for volumetric flow rate measurement according to the procedures outlined in EPA Method 1. When determining the location and number of sample points, RMCEINC took into account the number of sample ports, duct configuration, and location of upstream and downstream flow disturbances. **Figures 5-1** is a diagram of the engine showing the exhaust to the silencer and the ports used for testing. **Figure 5-2** presents the EPA Method 1 data sheets illustrating the port locations and the points used for each Method 2 traverse.

The flue gas velocity and volumetric flow rate were determined according to the procedures of EPA Method 2. A Type S pitot tube with a Type K thermocouple was used to measure velocity pressure and stack gas temperature at each sample point. Each pitot tube conformed to the geometric specifications of EPA Method 2 and was assigned a coefficient of 0.84. An umbilical cord connected the pitot tube to the meter box inclined manometer and digital temperature readout. RMCEINC leak-checked the pitot tube prior to and after conducting the traverse.

RMCEINC determined the flue gas composition and molecular weight using EPA Methods 3A and 4 procedures.

Figure 5-1 – Engine Schematic / Diagram.

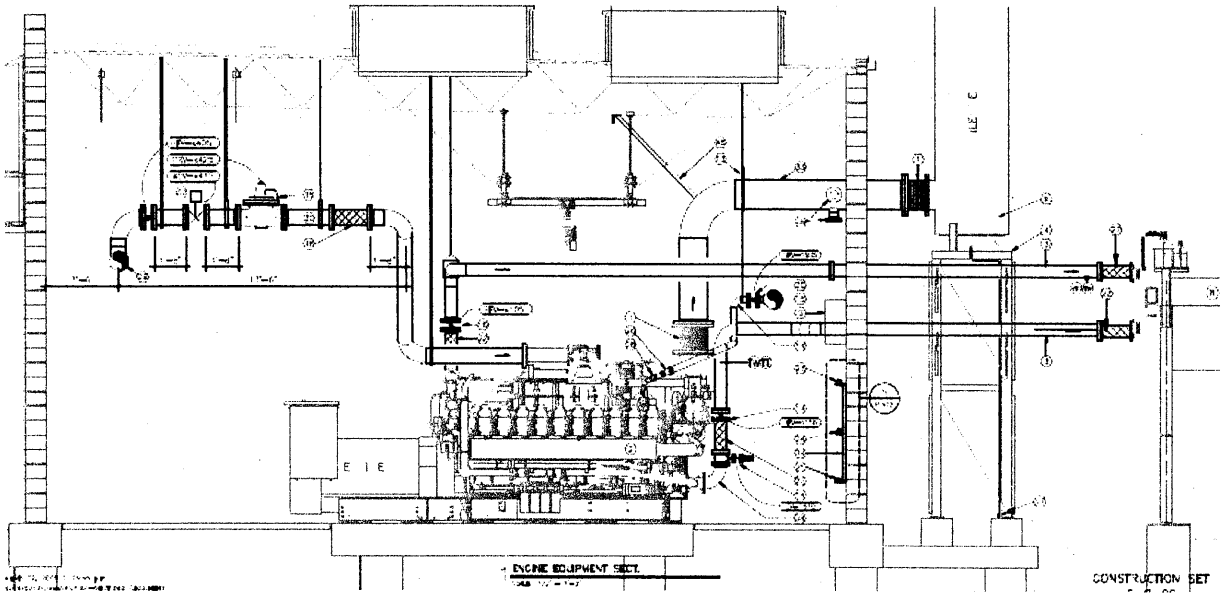

Figure 5-2 – EPA Method 1 Data – Engines 1-4

METHOD 1 - SAMPLE AND VELOCITY TRAVERSES FOR CIRCULAR SOURCES

Plant Name	Austin Gas Plant	Date	12/07/09
Sampling Location	Engines 1-4	Project #	2009-15029
Operator	RC/GC	# of Ports Available	2
Stack Type	Circular	# of Ports Used	2
Stack Size	3mal	Port Inside Diameter	3

Circular Stack or Duct Diameter			
Distance to Far Wall of Stack	(L_{fw})	24.00	in
Distance to Near Wall of Stack	(L_{nw})	8.00	in
Diameter of Stack	(D)	16.00	in
Area of Stack	(A_s)	1.40	ft^2

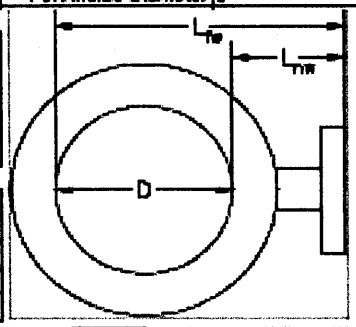

Distance from Port to Disturbances			
Distance Upstream	(B)	48.00	in
Diameters Upstream	(B_D)	3.00	diameters
Distance Downstream	(A)	60.00	in
Diameters Downstream	(A_D)	3.75	diameters

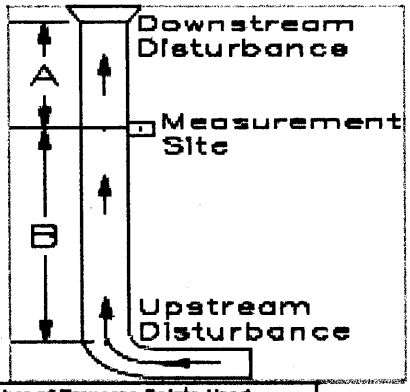

Number of Traverse Points Required			
Diameters to Flow Disturbance		Minimum Number of[1] Traverse Points	
Up Stream	Down Stream	Particulate Points	Velocity Points
2.00-4.99	0.50-1.24	24	16
5.00-5.99	1.25-1.49	20	16
6.00-6.99	1.50-1.74	16	12
7.00-7.99	1.75-1.99	12	12
>=8.00	>=2.00	8 or 12[2]	8 or 12[2]
Upstream Spec		24	16
Downstream Spec		8	8
Traverse Pts Required		24	16

[1] Check Minimum Number of Points for the Upstream and Downstream conditions, then use the largest
[2] 8 for Circular Stacks 12 to 24 inches
12 for Circular Stacks over 24 inches

Number of Traverse Points Used			
2	Ports by	8	Across
16	Pts Used	16	Required
☐	Particulate	☑	Velocity

Location of Traverse Points in Circular Stacks						
Traverse Point Number	(Fraction of Stack Diameter from Inside Wall to Traverse Point) Number of Traverse Points on a Diameter					
	2	4	6	8	10	12
1	.146	.067	.044	.032	.026	.021
2	.854	.250	.146	.105	.082	.067
3		.750	.296	.194	.146	.118
4		.933	.704	.323	.226	.177
5			.854	.677	.342	.250
6			.956	.806	.658	.356
7				.895	.774	.644
8				.968	.854	.750
9					.918	.823
10					.974	.882
11						.933
12						.979

Traverse Point Locations			
Traverse Point Number	Fraction of Stack Diameter	Distance from Inside Wall	Distance Including Nipple Length
		in	in
1	0.032	4/8	8 4/8
2	0.105	1 5/8	9 5/8
3	0.194	3 1/8	11 1/8
4	0.323	5 1/8	13 1/8
5	0.677	10 7/8	18 7/8
6	0.806	12 7/8	20 7/8
7	0.895	14 3/8	22 3/8
8	0.968	15 4/8	23 4/8
9			
10			
11			
12			

5.12 Instrumental Test Equipment and Procedures

The test program includes the measurement of exhaust gas concentrations of NO_x, and O_2. RMCEINC used the procedures that conform to the requirements of Title 40 CFR, Part 60, Appendix A, Methods 1, 2, 3A, 4 and 7E. Each of the three test runs included a minimum of one hour of continuous flue gas sampling.

Concentration measurements of O_2 and NO_x, were made according to EPA Methods 3A and 7E using the analyzers listed in **Table 5-1. Figure 5-3** is a schematic of the wet/dry extractive reference measurement gas sampling system used by RMCEINC. All components of the sampling system that contact the sample are stainless steel, glass, or Teflon.

A sampling probe provides a method of drawing a continuous sample of flue gases. The probe assembly is temperature controlled to maintain the sample above the dew point and includes a calibration value and sample filter. A temperature controlled Teflon umbilical connects the probe assembly to an ice bath condenser. The condenser is equipped with a condensate discharge pump to continuously remove the condensate from the condenser traps. The dried sample is then transported to the mobile laboratory's sample manifold.

TABLE 5-1 REFERENCE METHOD ANALYZERS

Parameter	Analyzer	Analytical Technique	Instrument Span
NO_x	Thermo Environmental Instruments Model 42	Chemiluminescence	0-245, ppm
O_2	Teledyne – 3300 or Servomex 1440	Fuel Cell / Paramagnetic	0-21 %

Figure 5-3. Reference Method Gas Sampling System Diagram

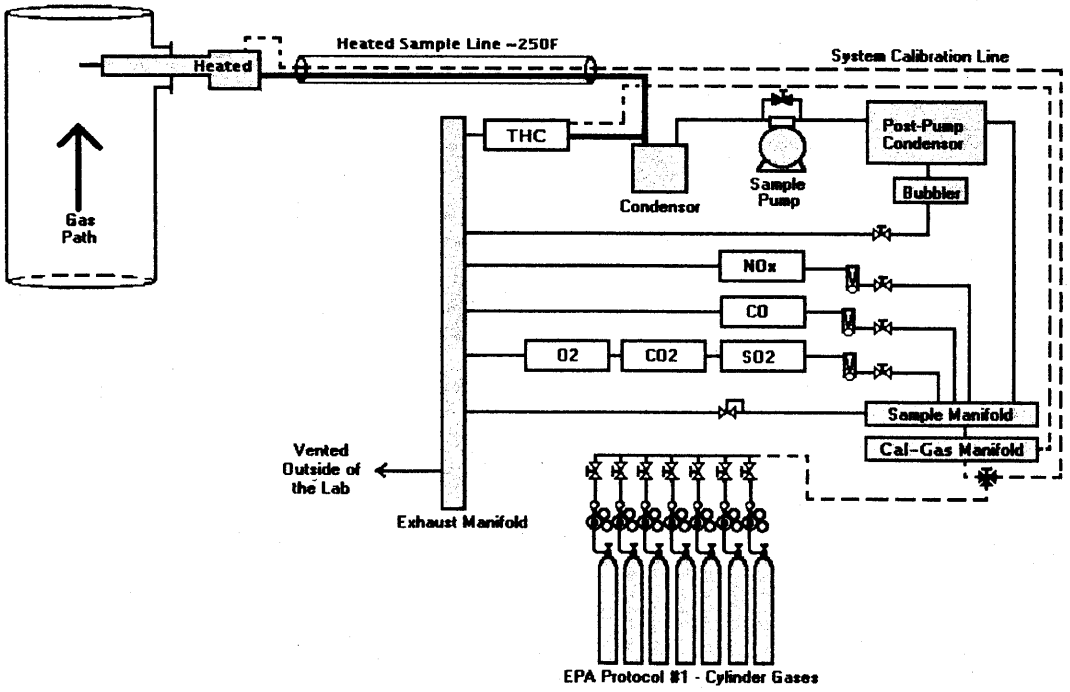

5.13 Instrumental Analytical Data

RMCEINC performed test runs to measures the flue gas for NO_x in terms of an emission rate (lb/Mw-Hr). A three-point (zero, mid-range, and high-range) analyzer calibration error check on each reference analyzer was performed before initiating the testing. This check is conducted after final calibration adjustments are made by injecting the calibration gases directly into each gas analyzer and recording the responses on the reference data acquisition system.

RMCEINC conducts zero and upscale calibration checks both before and after each test run in order to quantify measurement system calibration drift and sampling system bias. Upscale is either the low-, mid- or high-range gas, whichever most closely approximates the flue gas level. During these checks, the calibration gases are introduced into the sampling system through a 3-way valve assembly at the probe outlet so that the calibration gases are analyzed in the same manner as the flue gas samples.

RMCEINC recorded the reference analyzer measurements as 1-minute and 60-minute averages on its DAS. All test run concentration results were determined from the average gas concentrations measured during the run and adjusted based on the zero and upscale sampling system bias check results (Equation 7E-1 presented in Title 40 CFR Part 60, Method 7E, Section 8). The reference NO_x emission values in terms of pounds per hour and pounds per megawatt horsepower hour were computed from each test run average of adjusted, dry basis NO_x and percent O_2 using the Title 40 CFR Part 60 Appendix A Method 19.

6.0 EQUIPMENT CALIBRATION AND QUALITY ASSURANCE

RMCEINC followed the calibration and quality assurance procedures of EPA Methods 1, 2, 3A, 4, 5 and 7E throughout the test program. The maintenance for our meterboxes, probes, analyzers and a majority of our other test equipment is performed off site by either Clean Air Engineering or Millenium Instruments. These companies ensure that our equipment is operating correctly and within the specification of the respective methods. All equipment is calibrated in accordance with the EPA Methods and guidelines.

The results of sampling system bias and calibration drift tests for each test run are calculated and presented in the test report. Cylinder gases used during the testing are certified to meet or exceed EPA Protocol 1 requirements. The meter box calibrations, pitot tube inspections, calibration gas certificates of analysis and the analyzer quality assurance checks are included in **Appendix C**.

RMCEINC uses computers throughout the test program. Spreadsheets and software programs are checked in our office for accuracy. Software used by RMCEINC is structured to eliminate human errors in data entry where possible by automating the process. When possible RMCEINC, inputs field data directly into the DAS system and eliminates the hand written field data sheets. These systems provide an accurate measurement of the raw test data and are not used to modify or change test data in any manner. Equations used in these systems are taken directly from the CFR when possible, and notations are provided if originated from an alternate source or customized in any manner.

APPENDIX A. TEST SUMMARY SHEETS

Emissions Summary

Company: Waste Management of Texas Austin Gas to Energy Facility
Source: Eng 1 & 2, 3 & 4

Date: 11/17/2009
Project #: 2009-16797

RUN #	Test Duration 2:42 Start Time	End Time	O2-1 %		NOx-1 ppm		NOx-2 ppm		O2-2 %		NOx-1 ppm @15% O2		NOx-2 ppm @15% O2		NOx-1 lbs/mmBtu		NOx-2 lbs/mmBtu		Flowrate DSCFM
			DATA Link from the DATA Logger																
				Engine 1				Engine 4			Engine 1			Engine 4	Engine 1			Engine 4	Eng 1
1	12/7/2009 10:00	11:00	8.62		70.77		88.31		7.46			34.00		38.76		0.136		0.156	4285.0
2	12/7/2009 11:08	12:08	8.60		69.82		76.46		7.41			33.49		33.45		0.134		0.134	4328.0
3	12/7/2009 12:20	13:20	8.49		69.70		78.74		7.58			33.14		34.88		0.133		0.140	4175.0
				Engine 2				Engine 3			Engine 2			Engine 3	Engine 2			Engine 3	Eng 2
4	12/8/2009 9:30	10:30	8.14		64.23		90.36		7.51			29.71		39.83		0.119		0.160	4274.0
5	12/8/2009 10:35	11:35	8.11		64.36		88.47		7.63			29.68		39.34		0.119		0.158	4281.0
6	12/8/2009 11:42	**12:42**	8.07		63.99		77.02		7.63			29.42		34.25		0.118		0.137	4270.0
7		13:48																	
8		14:54																	
9		**16:00**																	
10		17:06																	
11		18:12																	
12		19:18																	
13		20:24																	
14		21:30																	
15		22:36																	
		AVERAGE	8.34		67.15		83.23		7.54			31.58		36.75		0.127		0.147	

	Start Time	End Time								NOx-1 g/BHP-Hr	NOx-2 g/BHP-Hr	NOx-1 lb/MWhr	NOx-2 lb/MWhr	NOx-1 lbs/Hr	NOx-2 lbs/Hr	Flowrate DSCFM
			Estimated Wet based measurements corrected from DATA Logger													
										Eng 1	Eng 4	Eng 1	Eng 4	Engine 1	Engine 4	Eng 4
1	12/7/2009 10:00	11:00								0.44	0.54	1.36	1.66	2.17	2.65	4190.00
2	12/7/2009 11:08	12:08								0.44	0.47	1.35	1.44	2.16	2.30	4201.00
3	12/7/2009 12:20	13:20								0.42	0.48	1.30	1.47	2.08	2.36	4180.00
										Eng 2	Eng 3	Eng 2	Eng 3	Engine 2	Engine 3	Eng 3
4	12/8/2009 9:30	10:30								0.40	0.57	1.23	1.74	1.97	2.78	4297.00
5	12/8/2009 10:35	11:35								0.40	0.55	1.23	1.68	1.97	2.69	4245.00
6	12/8/2009 11:42	12:42								0.40	0.48	1.22	1.47	1.96	2.35	4268.00
7		13:48														
8		14:54														
9		16:00														
10		17:06														
11		18:12														
12		19:18														
13		20:24														
14		21:30														
15		22:36														
		AVERAGE								0.42	0.51	1.28	1.58	2.05	2.52	

APPENDIX B. FIELD TEST DATA W/ INSTRUMENTAL TEST DATA

Method 1-4 Field Data

Flow Rate Determinations

Calibration Summaries

Instrumental Test Run Data

Reference Data Summary

METHOD 1 - SAMPLE AND VELOCITY TRAVERSES FOR CIRCULAR SOURCES

Plant Name	Austin Gas Plant	**Date**	12/07/09
Sampling Location	Engines 1-4	**Project #**	2009-15029
Operator	RC/GC	**# of Ports Available**	2
Stack Type	Circular	**# of Ports Used**	2
Stack Size	Small	**Port Inside Diameter**	3

Circular Stack or Duct Diameter			
Distance to Far Wall of Stack	(L_{fw})	24.00	in
Distance to Near Wall of Stack	(L_{nw})	8.00	in
(=Lfw - Lnw) **Diameter of Stack**	(D)	16.00	in
(=3.14(D/2/Cunits)2) **Area of Stack**	(A_s)	1.40	ft^2

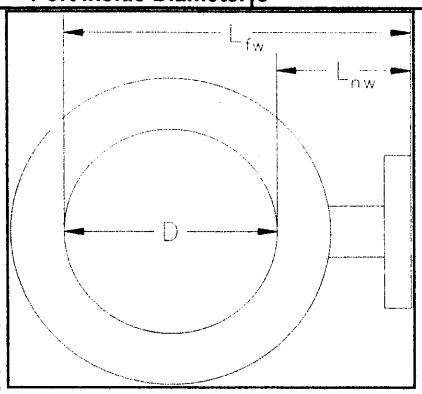

Distance from Port to Disturbances			
Distance Upstream	(B)	48.00	in
(=B/D) **Diameters Upstream**	(B_D)	3.00	diameters
Distance Downstream	(A)	60.00	in
(=A/D) **Diameters Downstream**	(A_D)	3.75	diameters

Number of Traverse Points Required			
Diameters to Flow Disturbance		**Minimum Number of[1] Traverse Points**	
Up Stream	**Down Stream**	**Particulate Points**	**Velocity Points**
2.00-4.99	0.50-1.24	24	16
5.00-5.99	1.25-1.49	20	16
6.00-6.99	1.50-1.74	16	12
7.00-7.99	1.75-1.99	12	12
>= 8.00	>=2.00	8 or 12[2]	8 or 12[2]
Upstream Spec		24	16
Downstream Spec		8	8
Traverse Pts Required		24	16

[1] Check Minimum Number of Points for the Upstream and Downstream conditions, then use the largest.
[2] 8 for Circular Stacks 12 to 24 inches
12 for Circular Stacks over 24 inches

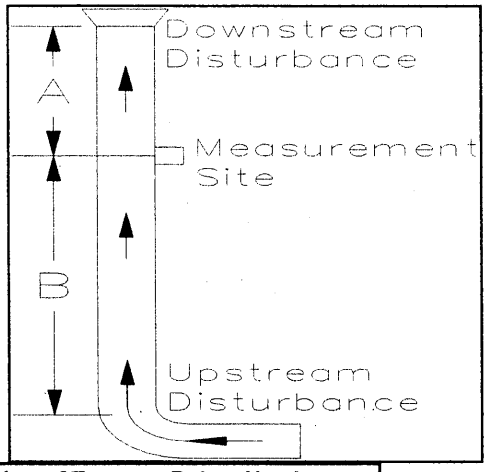

Number of Traverse Points Used			
2	**Ports by**	8	**Across**
16	**Pts Used**	16	**Required**
☐	**Particulate**	☑	**Velocity**

Location of Traverse Points in Circular Stacks						
Traverse Point Number	(Fraction of Stack Diameter from Inside Wall to Traverse Point) Number of Traverse Points on a Diameter					
	2	4	6	8	10	12
1	.146	.067	.044	.032	.026	.021
2	.854	.250	.146	.105	.082	.067
3		.750	.296	.194	.146	.118
4		.933	.704	.323	.226	.177
5			.854	.677	.342	.250
6			.956	.806	.658	.356
7				.895	.774	.644
8				.968	.854	.750
9					.918	.823
10					.974	.882
11						.933
12						.979

Traverse Point Locations			
Traverse Point Number	**Fraction of Stack Diameter**	**Distance from Inside Wall**	**Distance Including Nipple Length**
		in	in
1	0.032	4/8	8 4/8
2	0.105	1 5/8	9 5/8
3	0.194	3 1/8	11 1/8
4	0.323	5 1/8	13 1/8
5	0.677	10 7/8	18 7/8
6	0.806	12 7/8	20 7/8
7	0.895	14 3/8	22 3/8
8	0.968	15 4/8	23 4/8
9			
10			
11			
12			

METHOD 4 RUN SUMMARY SHEET

Company: Waste Management of Texas
Source: WMI - Austin Gas to energy
Test Location: Engine 1

Load: 1600 KW

Run:	**M4-R1**	**M4-R2**	**M4-R3**
Flow Runs:	1	2	3
Start Time:	12/7/2009 10:00	12/7/2009 11:08	12/7/2009 12:20
End Time:	12/7/2009 11:00	12/7/2009 12:08	12/7/2009 13:20

RUN DATA

Meter voume start (cu. ft.):	908.013	961.028	976.913
Meter volume finish (cu. ft.):	923.340	976.533	992.731
Meter calib. factor (Y):	0.9790	0.9790	0.9790
Barometric pressure (in. Hg):	29.85	29.84	29.84
Average Delta-H (in. H2O):	1.77	1.77	1.77
Gas meter temperature (deg F):	75.0	78.0	81.0
Sil-Gel total wt. H2O collected (grams):	3.5	3.0	3.1
Impinger total volume H2O collected (ml):	34	33	38

CALCULATED RESULTS

Gas volume sampled (DSCF)*:	14.838	14.916	15.133
Water vapor volume (SCF)*:	1.765	1.695	1.935
Moisture content (% volume):	**10.6**	**10.2**	**11.3**

* 68 deg F (20 deg C) - 29.92 in. Hg

VOLUMETRIC FLOW RATE DETERMINATION

Company: Waste Management of Texas
Source: WMI - Austin Gas to energy
Test Location: Engine 1

Conducted By: AM/RC

Load: 1600 KW
Run: 1
Start Time: 12/7/2009 10:00
End Time: 12/7/2009 11:00

TEST DATA

Test Point	Delta P (in H2O)	Temp. (Deg F)	Test Point	Delta P (in H2O)	Temp. (Deg F)
A-1	2.700	923	B-5	3.100	923
A-2	2.500	923	B-6	2.800	923
A-3	2.600	923	B-7	2.700	923
A-4	2.800	923	B-8	2.300	923
A-5	2.900	923			
A-6	3.200	923			
A-7	3.000	923			
A-8	2.800	923			
B-1	2.890	923			
B-2	3.000	923			
B-3	3.200	923			
B-4	2.600	923			

Duct Area:	201.1	(A)	sq. inches
Barometric Pressure:	29.84	(Pbar)	inches Hg
Static Pressure:	-8.70	(PG)	inches H2O
Pitot Tube Coefficient:	0.84	(Cp)	
Percent O2:	8.6	% O2	
Percent CO2:	13.1	% CO2	
Percent Nitrogen:	78.3	% N2	
Percent Moisture:	10.6	$\%H_2O$	
Average Delta P:	2.82		inches H2O
Root Mean Sq. Delta P:	2.81	(Pavg)	inches H2O
Mean Temperature:	923.0	(Ts)	Degrees F
Number Of Traverse Points:	16		

CALCULATIONS

DRY MOLE FRACTION OF STACK GAS: $Mfd = 1 - (\%H_2O / 100)$	Mfd =	0.894	
ABSOLUTE STACK GAS PRESSURE: Ps = Pbar + (Pg / 13.6)	Ps =	29.20	in. Hg
DRY MOLECULAR WEIGHT OF STACK GAS: $Md = 0.44 (\%CO_2) + 0.32 (\%O_2) + 0.28 (\%N_2)$	Md =	30.44	lb/lb-mole
WET MOLECULAR WEIGHT OF STACK GAS: $Ms = (Md)(Mfd) + 0.18 (\%H_2O)$	Ms =	29.12	lb/lb-mole
AVERAGE STACK GAS VELOCITY: $Vs = 85.49(Cp) X \{(Pavg)(Ts + 460)/[(Ps)(Ms)]\}^{0.5}$	Vs =	153.6	ft/sec
DRY VOLUMETRIC FLOW RATE: Qsd = 7.353(60)(Mfd)(Vs)(A)(Ps) / (Ts + 460)	Qsd =	4,285	DSCFM (DRY)

VOLUMETRIC FLOW RATE DETERMINATION

Company: Waste Management of Texas
Source: WMI - Austin Gas to energy
Test Location: Engine 4

Conducted By: AM/RC

Load: 1600 KW
Run: 2
Start Time: 12/7/2009 11:08
End Time: 12/7/2009 12:08

TEST DATA

Test Point	Delta P (in H2O)	Temp. (Deg F)	Test Point	Delta P (in H2O)	Temp. (Deg F)
A-1	2.800	926	B-5	3.200	926
A-2	2.600	926	B-6	2.900	926
A-3	2.400	926	B-7	2.800	926
A-4	2.500	926	B-8	2.600	926
A-5	2.800	926			
A-6	3.000	926			
A-7	3.300	926			
A-8	2.900	926			
B-1	2.900	926			
B-2	3.100	926			
B-3	3.000	926			
B-4	2.800	926			

Duct Area:	201.1	(A)	sq. inches
Barometric Pressure:	29.84	(Pbar)	inches Hg
Static Pressure:	-7.30	(PG)	inches H2O
Pitot Tube Coefficient:	0.84	(Cp)	
Percent O2:	8.6	% O2	
Percent CO2:	13.2	% CO2	
Percent Nitrogen:	78.2	% N2	
Percent Moisture:	10.2	$\%H_2O$	
Average Delta P:	2.85		inches H2O
Root Mean Sq. Delta P:	2.85	(Pavg)	inches H2O
Mean Temperature:	926.0	(Ts)	Degrees F
Number Of Traverse Points:	16		

CALCULATIONS

DRY MOLE FRACTION OF STACK GAS: $Mfd = 1 - (\%H_2O / 100)$	Mfd =	0.898	
ABSOLUTE STACK GAS PRESSURE: $Ps = Pbar + (Pg / 13.6)$	Ps =	29.30	in. Hg
DRY MOLECULAR WEIGHT OF STACK GAS: $Md = 0.44 (\%CO_2) + 0.32 (\%O_2) + 0.28 (\%N_2)$	Md =	30.46	lb/lb-mole
WET MOLECULAR WEIGHT OF STACK GAS: $Ms = (Md)(Mfd) + 0.18 (\%H_2O)$	Ms =	29.19	lb/lb-mole
AVERAGE STACK GAS VELOCITY: $Vs = 85.49(Cp) X \{(Pavg)(Ts + 460)/[(Ps)(Ms)]\}^{0.5}$	Vs =	154.2	ft/sec
DRY VOLUMETRIC FLOW RATE: $Qsd = 7.353(60)(Mfd)(Vs)(A)(Ps) / (Ts + 460)$	Qsd =	4,328	DSCFM (DRY)

VOLUMETRIC FLOW RATE DETERMINATION

Company: Waste Management of Texas
Source: WM - Austin Gas to energy
Test Location: Engine 3

Conducted By: AM/RC

Load: 1600 KW
Run: 3
Start Time: 12/7/2009 12:20
End Time: 12/7/2009 13:20

TEST DATA

Test Point	Delta P (in H2O)	Temp. (Deg F)	Test Point	Delta P (in H2O)	Temp. (Deg F)
A-1	2.600	918	B-5	2.500	918
A-2	2.500	918	B-6	3.000	918
A-3	2.100	918	B-7	3.100	918
A-4	3.000	918	B-8	2.700	918
A-5	2.800	918			
A-6	2.800	918			
A-7	2.400	918			
A-8	2.300	918			
B-1	3.000	918			
B-2	3.100	918			
B-3	2.700	918			
B-4	2.600	918			

Duct Area:	201.1	(A)	sq. inches
Barometric Pressure:	29.84	(Pbar)	inches Hg
Static Pressure:	-7.90	(PG)	inches H2O
Pitot Tube Coefficient:	0.84	(Cp)	
Percent O2:	8.5	% O2	
Percent CO2:	13.3	% CO2	
Percent Nitrogen:	78.2	% N2	
Percent Moisture:	11.3	$\%H_2O$	
Average Delta P:	2.70		inches H2O
Root Mean Sq. Delta P:	2.69	(Pavg)	inches H2O
Mean Temperature:	918.0	(Ts)	Degrees F
Number Of Traverse Points:	16		

CALCULATIONS

DRY MOLE FRACTION OF STACK GAS: $Mfd = 1 - (\%H_2O / 100)$	Mfd =	0.887	
ABSOLUTE STACK GAS PRESSURE: Ps = Pbar + (Pg / 13.6)	Ps =	29.26	in. Hg
DRY MOLECULAR WEIGHT OF STACK GAS: $Md = 0.44 (\%CO_2) + 0.32 (\%O_2) + 0.28 (\%N_2)$	Md =	30.47	lb/lb-mole
WET MOLECULAR WEIGHT OF STACK GAS: $Ms = (Md)(Mfd) + 0.18 (\%H_2O)$	Ms =	29.05	lb/lb-mole
AVERAGE STACK GAS VELOCITY: $Vs = 85.49(Cp) X \{(Pavg)(Ts + 460)/[(Ps)(Ms)]\}^{0.5}$	Vs =	150.0	ft/sec
DRY VOLUMETRIC FLOW RATE: Qsd = 7.353(60)(Mfd)(Vs)(A)(Ps) / (Ts + 460)	Qsd =	4,175	DSCFM (DRY)

METHOD 4 RUN SUMMARY SHEET

Company: Waste Management of Texas
Source: WMI - Austin Gas to energy
Test Location: Engine 4

Load: 1600 KW

Run:	**M4-R1**	**M4-R2**	**M4-R3**
Flow Runs:	1	2	3
Start Time:	12/07/09 10:00	12/07/09 11:08	12/07/09 12:20
End Time:	12/07/09 11:00	12/07/09 12:08	12/07/09 13:20

RUN DATA

Meter voume start (cu. ft.):	929.881	945.625	992.953
Meter volume finish (cu. ft.):	945.249	960.725	1008.381
Meter calib. factor (Y):	0.9790	0.9790	0.9790
Barometric pressure (in. Hg):	29.84	29.84	29.84
Average Delta-H (in. H2O):	1.77	1.77	1.77
Gas meter temperature (deg F):	77.0	77.0	78.0
Sil-Gel total wt. H2O collected (grams):	2.4	2.2	2.0
Impinger total volume H2O collected (ml):	36	36	38

CALCULATED RESULTS

Gas volume sampled (DSCF)*:	14.812	14.554	14.842
Water vapor volume (SCF)*:	1.807	1.798	1.883
Moisture content (% volume):	**10.9**	**11.0**	**11.3**

* 68 deg F (20 deg C) - 29.92 in. Hg

VOLUMETRIC FLOW RATE DETERMINATION

Company: Waste Management of Texas
Source: WMI - Austin Gas to energy
Test Location: Engine 4

Conducted By: AM/RC

Load: 1600 KW
Run: 4
Start Time: 12/7/2009 10:00
End Time: 12/7/2009 11:00

TEST DATA

Test Point	Delta P (in H2O)	Temp. (Deg F)	Test Point	Delta P (in H2O)	Temp. (Deg F)
A-1	2.800	899	B-5	2.400	899
A-2	2.700	899	B-6	2.200	899
A-3	2.500	899	B-7	2.400	899
A-4	3.100	899	B-8	2.500	899
A-5	3.000	899			
A-6	3.000	899			
A-7	2.700	899			
A-8	2.900	899			
B-1	2.600	899			
B-2	2.500	899			
B-3	2.800	899			
B-4	2.500	899			

Duct Area:	201.1	(A)	sq. inches
Barometric Pressure:	29.84	(Pbar)	inches Hg
Static Pressure:	-7.40	(PG)	inches H2O
Pitot Tube Coefficient:	0.84	(Cp)	
Percent O2:	7.6	% O2	
Percent CO2:	14.2	% CO2	
Percent Nitrogen:	78.2	% N2	
Percent Moisture:	10.9	$\%H_2O$	
Average Delta P:	2.66		inches H2O
Root Mean Sq. Delta P:	2.66	(Pavg)	inches H2O
Mean Temperature:	899.0	(Ts)	Degrees F
Number Of Traverse Points:	16		

CALCULATIONS

DRY MOLE FRACTION OF STACK GAS: $Mfd = 1 - (\%H_2O / 100)$	Mfd =	0.891	
ABSOLUTE STACK GAS PRESSURE: $Ps = Pbar + (Pg / 13.6)$	Ps =	29.30	in. Hg
DRY MOLECULAR WEIGHT OF STACK GAS: $Md = 0.44 (\%CO_2) + 0.32 (\%O_2) + 0.28 (\%N_2)$	Md =	30.58	lb/lb-mole
WET MOLECULAR WEIGHT OF STACK GAS: $Ms = (Md)(Mfd) + 0.18 (\%H_2O)$	Ms =	29.21	lb/lb-mole
AVERAGE STACK GAS VELOCITY: $Vs = 85.49(Cp) X \{(Pavg)(Ts + 460)/[(Ps)(Ms)]\}^{0.5}$	Vs =	147.5	ft/sec
DRY VOLUMETRIC FLOW RATE: $Qsd = 7.353(60)(Mfd)(Vs)(A)(Ps) / (Ts + 460)$	Qsd =	4,190	DSCFM (DRY)

VOLUMETRIC FLOW RATE DETERMINATION

Company: Waste Management of Texas
Source: WM - Austin Gas to energy
Test Location: Engine 1

Conducted By: AM/RC

Load: 1600 KW
Run: 5
Start Time: 12/7/2009 11:08
End Time: 12/7/2009 12:08

TEST DATA

Test Point	Delta P (in H2O)	Temp. (Deg F)	Test Point	Delta P (in H2O)	Temp. (Deg F)
A-1	2.600	905	B-5	2.500	905
A-2	2.800	905	B-6	2.600	905
A-3	2.400	905	B-7	2.800	905
A-4	3.000	905	B-8	2.500	905
A-5	2.900	905			
A-6	3.100	905			
A-7	2.700	905			
A-8	2.800	905			
B-1	2.500	905			
B-2	2.500	905			
B-3	2.700	905			
B-4	2.600	905			

Duct Area:	201.1	(A)	sq. inches
Barometric Pressure:	29.84	(Pbar)	inches Hg
Static Pressure:	-6.80	(PG)	inches H2O
Pitot Tube Coefficient:	0.84	(Cp)	
Percent O2:	7.4	% O2	
Percent CO2:	14.2	% CO2	
Percent Nitrogen:	78.4	% N2	
Percent Moisture:	11.0	$\%H_2O$	
Average Delta P:	2.69		inches H2O
Root Mean Sq. Delta P:	2.68	(Pavg)	inches H2O
Mean Temperature:	905.0	(Ts)	Degrees F
Number Of Traverse Points:	16		

CALCULATIONS

DRY MOLE FRACTION OF STACK GAS: $Mfd = 1 - (\%H_2O / 100)$	Mfd =	0.890	
ABSOLUTE STACK GAS PRESSURE: Ps = Pbar + (Pg / 13.6)	Ps =	29.34	in. Hg
DRY MOLECULAR WEIGHT OF STACK GAS: $Md = 0.44 (\%CO_2) + 0.32 (\%O_2) + 0.28 (\%N_2)$	Md =	30.57	lb/lb-mole
WET MOLECULAR WEIGHT OF STACK GAS: $Ms = (Md)(Mfd) + 0.18 (\%H_2O)$	Ms =	29.19	lb/lb-mole
AVERAGE STACK GAS VELOCITY: $Vs = 85.49(Cp) X \{(Pavg)(Ts + 460)/[(Ps)(Ms)]\}^{0.5}$	Vs =	148.5	ft/sec
DRY VOLUMETRIC FLOW RATE: Qsd = 7.353(60)(Mfd)(Vs)(A)(Ps) / (Ts + 460)	Qsd =	4,201	DSCFM (DRY)

VOLUMETRIC FLOW RATE DETERMINATION

Company: Waste Management of Texas
Source: WMI - Austin Gas to energy
Test Location: Engine 1

Conducted By: AM/RC

Load: 1600 KW
Run: 6
Start Time: 12/7/2009 12:20
End Time: 12/7/2009 13:20

TEST DATA

Test Point	Delta P (in H2O)	Temp. (Deg F)	Test Point	Delta P (in H2O)	Temp. (Deg F)
A-1	2.700	911	B-5	2.600	911
A-2	2.600	911	B-6	2.400	911
A-3	2.500	911	B-7	2.700	911
A-4	3.200	911	B-8	2.600	911
A-5	3.100	911			
A-6	2.800	911			
A-7	2.900	911			
A-8	2.800	911			
B-1	2.700	911			
B-2	2.400	911			
B-3	2.700	911			
B-4	2.400	911			

Duct Area:	201.1	(A)	sq. inches
Barometric Pressure:	29.84	(Pbar)	inches Hg
Static Pressure:	-7.40	(PG)	inches H2O
Pitot Tube Coefficient:	0.84	(Cp)	
Percent O2:	7.4	% O2	
Percent CO2:	14.5	% CO2	
Percent Nitrogen:	78.1	% N2	
Percent Moisture:	11.3	$\%H_2O$	
Average Delta P:	2.69		inches H2O
Root Mean Sq. Delta P:	2.69	(Pavg)	inches H2O
Mean Temperature:	911.0	(Ts)	Degrees F
Number Of Traverse Points:	16		

CALCULATIONS

DRY MOLE FRACTION OF STACK GAS: $Mfd = 1 - (\%H_2O / 100)$	Mfd =	0.887	
ABSOLUTE STACK GAS PRESSURE: $Ps = Pbar + (Pg / 13.6)$	Ps =	29.30	in. Hg
DRY MOLECULAR WEIGHT OF STACK GAS: $Md = 0.44 (\%CO_2) + 0.32 (\%O_2) + 0.28 (\%N_2)$	Md =	30.62	lb/lb-mole
WET MOLECULAR WEIGHT OF STACK GAS: $Ms = (Md)(Mfd) + 0.18 (\%H_2O)$	Ms =	29.20	lb/lb-mole
AVERAGE STACK GAS VELOCITY: $Vs = 85.49(Cp) X \{(Pavg)(Ts + 460)/[(Ps)(Ms)]\}^{0.5}$	Vs =	149.1	ft/sec
DRY VOLUMETRIC FLOW RATE: $Qsd = 7.353(60)(Mfd)(Vs)(A)(Ps) / (Ts + 460)$	Qsd =	4,180	DSCFM (DRY)

METHOD 4 RUN SUMMARY SHEET

Company: Waste Management of Texas
Source: WMI - Austin Gas to energy
Test Location: Engine 2

Load: 1600 KW

Run:	**M4-R1**	**M4-R2**	**M4-R3**
Flow Runs:	1	2	3
Start Time:	12/8/2009 9:30	12/8/2009 10:35	12/8/2009 11:45
End Time:	12/8/2009 10:30	12/8/2009 11:35	12/8/2009 12:45

RUN DATA

Meter voume start (cu. ft.):	25.337	55.533	85.113
Meter volume finish (cu. ft.):	39.528	71.783	100.716
Meter calib. factor (Y):	0.9790	0.9790	0.9790
Barometric pressure (in. Hg):	29.62	29.62	29.62
Average Delta-H (in. H2O):	1.77	1.77	1.77
Gas meter temperature (deg F):	77.0	78.0	78.0
Sil-Gel total wt. H2O collected (grams):	2.0	2.6	2.8
Impinger total volume H2O collected (ml):	34	36	34

CALCULATED RESULTS

Gas volume sampled (DSCF)*:	13.582	15.518	14.900
Water vapor volume (SCF)*:	1.695	1.817	1.732
Moisture content (% volume):	**11.1**	**10.5**	**10.4**

* 68 deg F (20 deg C) - 29.92 in. Hg

VOLUMETRIC FLOW RATE DETERMINATION

Company: Waste Management of Texas
Source: WMI - Austin Gas to energy
Test Location: Engine 2

Conducted By: AM/RC

Load: 1600 KW
Run: 1
Start Time: 12/8/2009 9:30
End Time: 12/8/2009 10:30

TEST DATA

Test Point	Delta P (in H2O)	Temp. (Deg F)	Test Point	Delta P (in H2O)	Temp. (Deg F)
A-1	3.000	909	B-5	2.800	909
A-2	3.100	909	B-6	2.700	909
A-3	2.800	909	B-7	2.500	909
A-4	2.700	909	B-8	2.400	909
A-5	2.700	909			
A-6	2.900	909			
A-7	2.800	909			
A-8	2.600	909			
B-1	2.900	909			
B-2	2.900	909			
B-3	3.000	909			
B-4	3.100	909			

Duct Area:	201.1	(A)	sq. inches
Barometric Pressure:	29.62	(Pbar)	inches Hg
Static Pressure:	-7.30	(PG)	inches H2O
Pitot Tube Coefficient:	0.84	(Cp)	
Percent O2:	8.1	% O2	
Percent CO2:	13.1	% CO2	
Percent Nitrogen:	78.8	% N2	
Percent Moisture:	11.1	$\%H_2O$	
Average Delta P:	2.81		inches H2O
Root Mean Sq. Delta P:	2.80	(Pavg)	inches H2O
Mean Temperature:	909.0	(Ts)	Degrees F
Number Of Traverse Points:	16		

CALCULATIONS

DRY MOLE FRACTION OF STACK GAS: $Mfd = 1 - (\%H_2O / 100)$	Mfd =	0.889	
ABSOLUTE STACK GAS PRESSURE: Ps = Pbar + (Pg / 13.6)	Ps =	29.08	in. Hg
DRY MOLECULAR WEIGHT OF STACK GAS: $Md = 0.44 (\%CO_2) + 0.32 (\%O_2) + 0.28 (\%N_2)$	Md =	30.42	lb/lb-mole
WET MOLECULAR WEIGHT OF STACK GAS: $Ms = (Md)(Mfd) + 0.18 (\%H_2O)$	Ms =	29.04	lb/lb-mole
AVERAGE STACK GAS VELOCITY: $Vs = 85.49(Cp) X \{(Pavg)(Ts + 460)/[(Ps)(Ms)]\}^{0.5}$	Vs =	153.1	ft/sec
DRY VOLUMETRIC FLOW RATE: Qsd = 7.353(60)(Mfd)(Vs)(A)(Ps) / (Ts + 460)	Qsd =	4,274	DSCFM (DRY)

VOLUMETRIC FLOW RATE DETERMINATION

Company: Waste Management of Texas
Source: WMI - Austin Gas to energy
Test Location: Engine 4

Conducted By: AM/RC

Load: 1600 KW
Run: 2
Start Time: 12/8/2009 10:35
End Time: 12/8/2009 11:35

TEST DATA

Test Point	Delta P (in H2O)	Temp. (Deg F)	Test Point	Delta P (in H2O)	Temp. (Deg F)
A-1	2.800	915	B-5	2.900	915
A-2	2.700	915	B-6	2.600	915
A-3	2.900	915	B-7	2.400	915
A-4	2.700	915	B-8	2.600	915
A-5	2.800	915			
A-6	2.900	915			
A-7	2.900	915			
A-8	2.700	915			
B-1	2.900	915			
B-2	3.200	915			
B-3	2.800	915			
B-4	3.000	915			

Duct Area:	201.1	(A)	sq. inches
Barometric Pressure:	29.62	(Pbar)	inches Hg
Static Pressure:	-6.60	(PG)	inches H2O
Pitot Tube Coefficient:	0.84	(Cp)	
Percent O2:	8.1	% O2	
Percent CO2:	13.7	% CO2	
Percent Nitrogen:	78.2	% N2	
Percent Moisture:	10.5	$\%H_2O$	
Average Delta P:	2.80		inches H2O
Root Mean Sq. Delta P:	2.80	(Pavg)	inches H2O
Mean Temperature:	915.0	(Ts)	Degrees F
Number Of Traverse Points:	16		

CALCULATIONS

DRY MOLE FRACTION OF STACK GAS: $Mfd = 1 - (\%H_2O / 100)$	Mfd =	0.895	
ABSOLUTE STACK GAS PRESSURE: Ps = Pbar + (Pg / 13.6)	Ps =	29.13	in. Hg
DRY MOLECULAR WEIGHT OF STACK GAS: $Md = 0.44 (\%CO_2) + 0.32 (\%O_2) + 0.28 (\%N_2)$	Md =	30.52	lb/lb-mole
WET MOLECULAR WEIGHT OF STACK GAS: $Ms = (Md)(Mfd) + 0.18 (\%H_2O)$	Ms =	29.20	lb/lb-mole
AVERAGE STACK GAS VELOCITY: $Vs = 85.49(Cp) X \{(Pavg)(Ts + 460)/[(Ps)(Ms)]\}^{0.5}$	Vs =	152.7	ft/sec
DRY VOLUMETRIC FLOW RATE: Qsd = 7.353(60)(Mfd)(Vs)(A)(Ps) / (Ts + 460)	Qsd =	4,281	DSCFM (DRY)

VOLUMETRIC FLOW RATE DETERMINATION

Company: Waste Management of Texas
Source: WMI - Austin Gas to energy
Test Location: Engine 3

Conducted By: AM/RC

Load: 1600 KW
Run: 3
Start Time: 12/8/2009 11:45
End Time: 12/8/2009 12:45

TEST DATA

Test Point	Delta P (in H2O)	Temp. (Deg F)	Test Point	Delta P (in H2O)	Temp. (Deg F)
A-1	2.900	914	B-5	2.600	914
A-2	3.100	914	B-6	2.700	914
A-3	3.000	914	B-7	2.600	914
A-4	2.800	914	B-8	2.700	914
A-5	2.900	914			
A-6	2.600	914			
A-7	2.700	914			
A-8	2.500	914			
B-1	2.800	914			
B-2	2.700	914			
B-3	2.800	914			
B-4	2.900	914			

Duct Area:	201.1	(A)	sq. inches
Barometric Pressure:	29.62	(Pbar)	inches Hg
Static Pressure:	-6.70	(PG)	inches H2O
Pitot Tube Coefficient:	0.84	(Cp)	
Percent O2:	8.2	% O2	
Percent CO2:	12.9	% CO2	
Percent Nitrogen:	78.9	% N2	
Percent Moisture:	10.4	$\%H_2O$	
Average Delta P:	2.77		inches H2O
Root Mean Sq. Delta P:	2.77	(Pavg)	inches H2O
Mean Temperature:	914.0	(Ts)	Degrees F
Number Of Traverse Points:	16		

CALCULATIONS

DRY MOLE FRACTION OF STACK GAS: $Mfd = 1 - (\%H_2O / 100)$	Mfd =	0.896	
ABSOLUTE STACK GAS PRESSURE: $Ps = Pbar + (Pg / 13.6)$	Ps =	29.13	in. Hg
DRY MOLECULAR WEIGHT OF STACK GAS: $Md = 0.44 (\%CO_2) + 0.32 (\%O_2) + 0.28 (\%N_2)$	Md =	30.39	lb/lb-mole
WET MOLECULAR WEIGHT OF STACK GAS: $Ms = (Md)(Mfd) + 0.18 (\%H_2O)$	Ms =	29.10	lb/lb-mole
AVERAGE STACK GAS VELOCITY: $Vs = 85.49(Cp) X \{(Pavg)(Ts + 460)/[(Ps)(Ms)]\}^{\wedge 0.5}$	Vs =	152.1	ft/sec
DRY VOLUMETRIC FLOW RATE: $Qsd = 7.353(60)(Mfd)(Vs)(A)(Ps) / (Ts + 460)$	Qsd =	4,270	DSCFM (DRY)

METHOD 4 RUN SUMMARY SHEET

Company: Waste Management of Texas
Source: WMI - Austin Gas to energy
Test Location: Engine 3

Load: 1600 KW

Run:	**M4-R1**	**M4-R2**	**M4-R3**
Flow Runs:	1	2	3
Start Time:	12/8/2009 9:30	12/8/2009 10:35	12/8/2009 11:45
End Time:	12/8/2009 10:30	12/8/2009 11:35	12/8/2009 12:45

RUN DATA

Meter voume start (cu. ft.):	9.954	39.811	71.438
Meter volume finish (cu. ft.):	24.941	55.101	84.755
Meter calib. factor (Y):	0.9790	0.9790	0.9790
Barometric pressure (in. Hg):	29.62	29.62	29.62
Average Delta-H (in. H2O):	1.77	1.77	1.77
Gas meter temperature (deg F):	76.0	77.0	78.0
Sil-Gel total wt. H2O collected (grams):	4.0	3.5	2.0
Impinger total volume H2O collected (ml):	32	34	33

CALCULATED RESULTS

Gas volume sampled (DSCF)*:	14.365	14.628	12.717
Water vapor volume (SCF)*:	1.695	1.765	1.647
Moisture content (% volume):	**10.6**	**10.8**	**11.5**

* 68 deg F (20 deg C) - 29.92 in. Hg

VOLUMETRIC FLOW RATE DETERMINATION

Company: Waste Management of Texas
Source: WMI - Austin Gas to energy
Test Location: Engine 3

Conducted By: AM/RC

Load: 1600 KW
Run: 4
Start Time: 12/8/2009 9:30
End Time: 12/8/2009 10:30

TEST DATA

Test Point	Delta P (in H2O)	Temp. (Deg F)	Test Point	Delta P (in H2O)	Temp. (Deg F)
A-1	3.200	908	B-5	2.800	908
A-2	2.900	908	B-6	2.400	908
A-3	2.700	908	B-7	3.000	908
A-4	2.500	908	B-8	2.900	908
A-5	2.800	908			
A-6	2.900	908			
A-7	3.000	908			
A-8	2.600	908			
B-1	2.700	908			
B-2	2.500	908			
B-3	2.800	908			
B-4	2.700	908			

Duct Area:	201.1	(A)	sq. inches
Barometric Pressure:	29.62	(Pbar)	inches Hg
Static Pressure:	-7.20	(PG)	inches H2O
Pitot Tube Coefficient:	0.84	(Cp)	
Percent O2:	7.7	% O2	
Percent CO2:	13.1	% CO2	
Percent Nitrogen:	79.2	% N2	
Percent Moisture:	10.6	$\%H_2O$	
Average Delta P:	2.78		inches H2O
Root Mean Sq. Delta P:	2.77	(Pavg)	inches H2O
Mean Temperature:	908.0	(Ts)	Degrees F
Number Of Traverse Points:	16		

CALCULATIONS

DRY MOLE FRACTION OF STACK GAS: $Mfd = 1 - (\%H_2O / 100)$	Mfd =	0.894	
ABSOLUTE STACK GAS PRESSURE: Ps = Pbar + (Pg / 13.6)	Ps =	29.09	in. Hg
DRY MOLECULAR WEIGHT OF STACK GAS: $Md = 0.44 (\%CO_2) + 0.32 (\%O_2) + 0.28 (\%N_2)$	Md =	30.40	lb/lb-mole
WET MOLECULAR WEIGHT OF STACK GAS: $Ms = (Md)(Mfd) + 0.18 (\%H_2O)$	Ms =	29.10	lb/lb-mole
AVERAGE STACK GAS VELOCITY: $Vs = 85.49(Cp) X \{(Pavg)(Ts + 460)/[(Ps)(Ms)]\}^{0.5}$	Vs =	152.0	ft/sec
DRY VOLUMETRIC FLOW RATE: Qsd = 7.353(60)(Mfd)(Vs)(A)(Ps) / (Ts + 460)	Qsd =	4,274	DSCFM (DRY)

VOLUMETRIC FLOW RATE DETERMINATION

Company: Waste Management of Texas
Source: WMI - Austin Gas to energy
Test Location: Engine 2

Conducted By: AM/RC

Load: 1600 KW
Run: 5
Start Time: 12/8/2009 10:35
End Time: 12/8/2009 11:35

TEST DATA

Test Point	Delta P (in H2O)	Temp. (Deg F)	Test Point	Delta P (in H2O)	Temp. (Deg F)
A-1	2.800	911	B-5	2.600	911
A-2	2.700	911	B-6	2.300	911
A-3	2.900	911	B-7	2.900	911
A-4	3.000	911	B-8	2.600	911
A-5	3.000	911			
A-6	3.100	911			
A-7	2.700	911			
A-8	2.600	911			
B-1	2.600	911			
B-2	2.500	911			
B-3	2.900	911			
B-4	2.800	911			

Duct Area:	201.1	(A)	sq. inches
Barometric Pressure:	29.62	(Pbar)	inches Hg
Static Pressure:	-6.90	(PG)	inches H2O
Pitot Tube Coefficient:	0.84	(Cp)	
Percent O2:	7.6	% O2	
Percent CO2:	12.9	% CO2	
Percent Nitrogen:	79.5	% N2	
Percent Moisture:	10.8	$\%H_2O$	
Average Delta P:	2.75		inches H2O
Root Mean Sq. Delta P:	2.75	(Pavg)	inches H2O
Mean Temperature:	911.0	(Ts)	Degrees F
Number Of Traverse Points:	16		

CALCULATIONS

DRY MOLE FRACTION OF STACK GAS: $Mfd = 1 - (\%H_2O / 100)$	Mfd =	0.892	
ABSOLUTE STACK GAS PRESSURE: $Ps = Pbar + (Pg / 13.6)$	Ps =	29.11	in. Hg
DRY MOLECULAR WEIGHT OF STACK GAS: $Md = 0.44 (\%CO_2) + 0.32 (\%O_2) + 0.28 (\%N_2)$	Md =	30.37	lb/lb-mole
WET MOLECULAR WEIGHT OF STACK GAS: $Ms = (Md)(Mfd) + 0.18 (\%H_2O)$	Ms =	29.04	lb/lb-mole
AVERAGE STACK GAS VELOCITY: $Vs = 85.49(Cp) X \{(Pavg)(Ts + 460)/[(Ps)(Ms)]\}^{0.5}$	Vs =	151.6	ft/sec
DRY VOLUMETRIC FLOW RATE: $Qsd = 7.353(60)(Mfd)(Vs)(A)(Ps) / (Ts + 460)$	Qsd =	4,245	DSCFM (DRY)

VOLUMETRIC FLOW RATE DETERMINATION

Company: Waste Management of Texas
Source: WMI - Austin Gas to energy
Test Location: Engine 2

Conducted By: AM/RC

Load: 1600 KW
Run: 6
Start Time: 12/8/2009 11:45
End Time: 12/8/2009 12:45

TEST DATA

Test Point	Delta P (in H2O)	Temp. (Deg F)	Test Point	Delta P (in H2O)	Temp. (Deg F)
A-1	3.000	911	B-5	3.100	911
A-2	3.100	911	B-6	2.600	911
A-3	2.900	911	B-7	2.500	911
A-4	2.800	911	B-8	2.400	911
A-5	2.900	911			
A-6	3.000	911			
A-7	2.600	911			
A-8	2.500	911			
B-1	2.800	911			
B-2	2.900	911			
B-3	2.900	911			
B-4	3.000	911			

Duct Area:	201.1	(A)	sq. inches
Barometric Pressure:	29.62	(Pbar)	inches Hg
Static Pressure:	-6.80	(PG)	inches H2O
Pitot Tube Coefficient:	0.84	(Cp)	
Percent O2:	7.6	% O2	
Percent CO2:	13.0	% CO2	
Percent Nitrogen:	79.4	% N2	
Percent Moisture:	11.5	$\%H_2O$	
Average Delta P:	2.81		inches H2O
Root Mean Sq. Delta P:	2.81	(Pavg)	inches H2O
Mean Temperature:	911.0	(Ts)	Degrees F
Number Of Traverse Points:	16		

CALCULATIONS

DRY MOLE FRACTION OF STACK GAS: $Mfd = 1 - (\%H_2O / 100)$	Mfd =	0.885	
ABSOLUTE STACK GAS PRESSURE: $Ps = Pbar + (Pg / 13.6)$	Ps =	29.12	in. Hg
DRY MOLECULAR WEIGHT OF STACK GAS: $Md = 0.44 (\%CO_2) + 0.32 (\%O_2) + 0.28 (\%N_2)$	Md =	30.38	lb/lb-mole
WET MOLECULAR WEIGHT OF STACK GAS: $Ms = (Md)(Mfd) + 0.18 (\%H_2O)$	Ms =	28.96	lb/lb-mole
AVERAGE STACK GAS VELOCITY: $Vs = 85.49(Cp) X \{(Pavg)(Ts + 460)/[(Ps)(Ms)]\}^{\sim 0.5}$	Vs =	153.4	ft/sec
DRY VOLUMETRIC FLOW RATE: $Qsd = 7.353(60)(Mfd)(Vs)(A)(Ps) / (Ts + 460)$	Qsd =	4,265	DSCFM (DRY)

Calibration Error Test at Run 1 . STRATA Version 2.01

Operator:	RMC Environmental, Inc.			
Plant Name:	WMI-Austin Gas to Energy			
Location:	Engines 1-4			
	Reference Cylinder Numbers			
	Zero	Low-range	Mid-range	High-range
O2-1	SG9150522		CC14014	CC147760
NOx-1	CC14014		SG9150522	CC208805
O2-2	SG9150522		CC14014	CC147760
NOx-2	CC14014		SG9150522	CC208805

Date/Time	12/7/2009	8:26:33 PASSED		
Analyte	O2-1	NOx-1	O2-2	NOx-2
Units	%	ppm	%	ppm
Zero Ref Cyl	0.00	0.00	0.00	0.00
Zero Avg	0.14	3.14	0.04	0.11
Zero Error%	0.70	1.30	0.20	0.00
Low Ref Cyl				
Low Avg				
Low Error%				
Mid Ref Cyl	12.04	115.40	12.04	115.40
Mid Avg	12.04	115.00	12.22	115.16
Mid Error%	0.00	0.20	0.90	0.10
High Ref Cyl	20.85	262.60	20.85	262.60
High Avg	20.68	261.69	20.85	266.05
High Error%	0.80	0.40	0.00	1.40

Initial System Bias Check for Run 1 . STRATA Version 2.01

Operator:	RMC Environmental. Inc.	
Plant Name:	WMI-Austin Gas to Energy	
Location:	Engines 1-4	
	Reference Cylinder Numbers	
	Zero	Span
O2-1	SG9150522	CC14014
NOx-1	CC14014	SG9150522
O2-2	SG9150522	CC14014
NOx-2	CC14014	SG9150522

Date/Time	12/7/2009	8:29:49 PASSED		
Analyte	O2-1	NOx-1	O2-2	NOx-2
Units	%	ppm	%	ppm
Zero Ref Cyl	0.00	0.00	0.00	0.00
Zero Cal	0.14	3.14	0.04	0.11
Zero Avg	0.14	5.27	0.04	0.70
Zero Bias%	0.00	0.90	0.00	0.20
Zero Drift%				
Span Ref Cyl	12.04	115.40	12.04	115.40
Span Cal	12.04	115.00	12.22	115.16
Span Avg	12.04	115.69	12.00	116.13
Span Bias%	0.00	0.30	1.00	0.40
Span Drift%				

Test Run 1 Begin. STRATA Version 2.01
Operator: RMC Environmental, Inc.
Plant Name: WMI-Austin Gas to Energy
Location: Engines 1-4

		O2-1 %	NOx-1 ppm	O2-2 %	NOx-2 ppm
Begin calculating run averages					
12/7/2009	10:01:52	8.585	75.18	7.399	88.87
12/7/2009	10:02:52	8.585	75.48	7.397	89.94
12/7/2009	10:03:52	8.584	74.43	7.392	91.66
12/7/2009	10:04:53	8.572	74.55	7.396	91.1
12/7/2009	10:05:53	8.569	74.77	7.389	90.65
12/7/2009	10:06:53	8.581	75.92	7.392	91.1
12/7/2009	10:07:51	8.579	75.01	7.387	91.92
12/7/2009	10:08:52	8.584	75.4	7.394	92.22
12/7/2009	10:09:52	8.575	74.47	7.382	90.69
12/7/2009	10:10:52	8.582	75.07	7.385	89.03
12/7/2009	10:11:52	8.576	74.47	7.391	88.61
12/7/2009	10:12:53	8.583	74.9	7.4	87.76
12/7/2009	10:13:53	8.573	74.95	7.377	88.07
12/7/2009	10:14:53	8.573	75.06	7.376	87.3
12/7/2009	10:15:51	8.575	73.65	7.382	86.05
12/7/2009	10:16:52	8.561	75.21	7.36	86.03
12/7/2009	10:17:52	8.565	74.5	7.38	87.45
12/7/2009	10:18:52	8.571	73.92	7.38	89.54
12/7/2009	10:19:53	8.57	74.6	7.38	88.06
12/7/2009	10:20:53	8.557	74.64	7.361	88.1
Begin Traverse					
12/7/2009	10:21:52	8.556	74.68	7.36	89.68
12/7/2009	10:22:52	8.557	74.91	7.363	88.47
12/7/2009	10:23:52	8.566	74.44	7.383	87.73
12/7/2009	10:24:52	8.556	74.05	7.374	86.85
12/7/2009	10:25:53	8.557	74.8	7.373	87.9
12/7/2009	10:26:53	8.553	73.91	7.346	85.96
12/7/2009	10:27:53	8.549	74.36	7.352	87.81
12/7/2009	10:28:51	8.563	73.42	7.366	89.03
12/7/2009	10:29:52	8.545	72.97	7.356	89.78
12/7/2009	10:30:52	8.557	73.81	7.365	91.71
12/7/2009	10:31:52	8.562	73.34	7.36	91.58
12/7/2009	10:32:52	8.561	73.53	7.356	91.91
12/7/2009	10:33:53	8.56	73.49	7.352	92.26
12/7/2009	10:34:53	8.568	74.3	7.359	92.02
12/7/2009	10:35:53	8.562	73.33	7.366	90.65
12/7/2009	10:36:51	8.565	73.47	7.363	91.65
12/7/2009	10:37:52	8.567	73.73	7.352	91.84
12/7/2009	10:38:52	8.668	74.01	7.366	90.67
12/7/2009	10:39:53	8.835	73.52	7.365	91.11

12/7/2009	10:40:53	8.818	72.85	7.567	91.23
Begin Traverse					
12/7/2009	10:41:51	8.814	73.43	7.81	90.86
12/7/2009	10:42:52	8.829	72.17	7.839	91.52
12/7/2009	10:43:52	8.817	71.77	7.833	90.33
12/7/2009	10:44:52	8.819	72.65	7.825	93.43
12/7/2009	10:45:53	8.827	72.4	7.858	90.91
12/7/2009	10:46:53	8.817	72.24	7.817	92.89
12/7/2009	10:47:53	8.837	72.82	7.863	92.39
12/7/2009	10:48:52	8.819	71.66	7.843	92.89
12/7/2009	10:49:52	8.822	72.19	7.844	94.31
12/7/2009	10:50:52	8.838	71.41	7.856	94.76
12/7/2009	10:51:52	8.829	71.23	7.834	92.83
12/7/2009	10:52:53	8.845	72.19	7.859	93.36
12/7/2009	10:53:53	8.83	72.04	7.837	91.97
12/7/2009	10:54:53	8.834	72.41	7.85	93.38
12/7/2009	10:55:51	8.843	71.53	7.833	94.18
12/7/2009	10:56:52	8.855	71.33	7.847	92.16
12/7/2009	10:57:52	8.829	71.83	7.789	92.53
12/7/2009	10:58:52	8.853	72.18	7.827	91.09
12/7/2009	10:59:52	8.856	71.94	7.838	91.01
12/7/2009	11:00:53	8.864	71.97	7.831	91.65
Average of Test Run		O2-1	NOx-1	O2-2	NOx-2
		%	ppm	%	ppm
12/7/2009	11:00:53	8.667	73.58	7.531	90.54
Test Run 1 End					

Final System Bias Check for Run 1 . STRATA Version 2.01

Operator:	RMC Environmental, Inc.	
Plant Name:	WMI-Austin Gas to Energy	
Location:	Engines 1-4	
	Reference Cylinder Numbers	
	Zero	Span
O2-1	SG9150522	CC14014
NOx-1	CC14014	SG9150522
O2-2	SG9150522	CC14014
NOx-2	CC14014	SG9150522

Date/Time	12/7/2009	11:05:05 PASSED		
Analyte	O2-1	NOx-1	O2-2	NOx-2
Units	%	ppm	%	ppm
Zero Ref Cyl	0.00	0.00	0.00	0.00
Zero Cal	0.14	3.14	0.04	0.11
Zero Avg	0.13	5.52	0.63	0.05
Zero Bias%	0.10	1.00	2.80	0.00
Zero Drift%	-0.10	0.10	2.80	-0.30
Span Ref Cyl	12.04	115.40	12.04	115.40
Span Cal	12.04	115.00	12.22	115.16
Span Avg	12.07	117.46	11.91	120.26
Span Bias%	0.10	1.00	1.50	2.00
Span Drift%	0.10	0.70	-0.40	1.70
Ini Zero Avg	0.14	5.27	0.04	0.70
Ini Span Avg	12.04	115.69	12.00	116.13
Run Avg	8.67	73.58	7.53	90.54
Co	0.13	5.40	0.34	0.38
Cm	12.05	116.57	11.95	118.20
Correct Avg	8.62	70.77	7.46	88.31

Test Run 2 Begin. STRATA Version 2.01
Operator: RMC Environmental, Inc.
Plant Name: WMI-Austin Gas to Energy
Location: Engines 1-4

Begin calculating run averages

		O2-1 %	NOx-1 ppm	O2-2 %	NOx-2 ppm
12/7/2009	11:09:00	8.692	67.82	7.405	78.98
12/7/2009	11:10:00	8.698	67.52	7.418	79.82
12/7/2009	11:11:00	8.673	68.65	7.39	80.02
12/7/2009	11:12:01	8.697	69.14	7.407	80.44
12/7/2009	11:13:01	8.697	68.3	7.416	79.82
12/7/2009	11:14:01	8.693	68.67	7.411	79.61
12/7/2009	11:15:02	8.675	68.66	7.426	78.9
12/7/2009	11:16:00	8.67	68.76	7.424	78.17
12/7/2009	11:17:00	8.668	69.4	7.418	79.09
12/7/2009	11:18:00	8.673	69.39	7.42	78.61
12/7/2009	11:19:01	8.677	69.36	7.44	78.57
12/7/2009	11:20:01	8.67	69.74	7.434	78.54
12/7/2009	11:21:01	8.674	69.33	7.432	78.6
12/7/2009	11:22:01	8.66	70.1	7.449	78.58
12/7/2009	11:23:02	8.661	71.9	7.43	78.59
12/7/2009	11:24:00	8.665	72.73	7.428	77.73
12/7/2009	11:25:00	8.662	74.18	7.418	78.18
12/7/2009	11:26:00	8.672	75.77	7.441	77.83
12/7/2009	11:27:01	8.65	76.99	7.446	78.64
12/7/2009	11:28:01	8.6	77.25	7.438	78.06
12/7/2009	11:29:02	8.504	83.02	7.413	79.36
12/7/2009	11:30:00	8.497	84.94	7.413	79.11
12/7/2009	11:31:00	8.461	84.21	7.406	78.33
12/7/2009	11:32:00	8.423	81.91	7.424	79.25
12/7/2009	11:33:01	8.677	111.67	7.42	78.84
12/7/2009	11:34:01	8.675	76.5	7.413	77.74
12/7/2009	11:35:01	8.688	74.24	7.436	78.31
12/7/2009	11:36:02	8.683	72.34	7.433	78.07
12/7/2009	11:37:00	8.688	72.38	7.433	78.16
12/7/2009	11:38:00	8.676	72.4	7.414	77.89
12/7/2009	11:39:00	8.652	72.42	7.425	77.71
12/7/2009	11:40:01	8.648	73.71	7.422	78.97
12/7/2009	11:41:01	8.659	79.32	7.434	77.29
12/7/2009	11:42:01	8.644	73.4	7.418	78.43
12/7/2009	11:43:01	8.654	73	7.412	79.39
12/7/2009	11:44:02	8.658	71.11	7.435	78.38
12/7/2009	11:45:00	8.671	71.57	7.438	79.59
12/7/2009	11:46:00	8.666	70.76	7.442	78.66
12/7/2009	11:47:00	8.66	71.2	7.419	79.05
12/7/2009	11:48:01	8.674	71.8	7.444	79.53

12/7/2009	11:49:02	8.677	71.79	7.446	78.03
12/7/2009	11:50:02	8.562	72.66	7.435	78.44
12/7/2009	11:51:00	8.454	73.85	7.441	78.85
12/7/2009	11:52:00	8.572	73.54	7.445	78.19
12/7/2009	11:53:00	8.684	76.26	7.405	78.95
12/7/2009	11:54:01	8.678	71.58	7.388	76.03
12/7/2009	11:55:01	8.678	71.34	7.394	75.91
12/7/2009	11:56:01	8.685	71.09	7.381	75.54
12/7/2009	11:57:02	8.696	71.17	7.384	75.44
12/7/2009	11:58:00	8.697	71.37	7.379	75.52
12/7/2009	11:59:00	8.714	71.43	7.384	76
12/7/2009	12:00:00	8.72	71.36	7.382	76.05
12/7/2009	12:01:01	8.736	70.63	7.375	75.35
12/7/2009	12:02:01	8.744	70.45	7.415	74.88
12/7/2009	12:03:01	8.759	70.51	7.401	76.36
12/7/2009	12:04:01	8.764	70.62	7.378	79.05
12/7/2009	12:05:02	8.855	71.11	7.423	79.99
12/7/2009	12:06:00	8.878	71.18	7.425	79.65
12/7/2009	12:07:00	9.345	73.65	7.402	78.86
12/7/2009	12:08:00	9.517	72.72	7.407	79.24
Average of Test Run		O2-1	NOx-1	O2-2	NOx-2
		%	ppm	%	ppm
12/7/2009	12:08:00	8.69	73.23	7.418	78.25

Test Run 2 End

Final System Bias Check for Run 2 . STRATA Version 2.01

Operator:	RMC Environmental, Inc.	
Plant Name:	WMI-Austin Gas to Energy	
Location:	Engines 1-4	
	Reference Cylinder Numbers	
	Zero	Span
O2-1	SG9150522	CC14014
NOx-1	CC14014	SG9150522
O2-2	SG9150522	CC14014
NOx-2	CC14014	SG9150522

Date/Time	12/7/2009	12:18:09 PASSED		
Analyte	O2-1	NOx-1	O2-2	NOx-2
Units	%	ppm	%	ppm
Zero Ref Cyl	0.00	0.00	0.00	0.00
Zero Cal	0.14	3.14	0.04	0.11
Zero Avg	0.14	6.74	0.13	0.01
Zero Bias%	0.00	1.40	0.40	0.00
Zero Drift%	0.00	0.50	-2.40	0.00
Span Ref Cyl	12.04	115.40	12.04	115.40
Span Cal	12.04	115.00	12.22	115.16
Span Avg	12.16	116.61	11.72	115.91
Span Bias%	0.60	0.60	2.40	0.30
Span Drift%	0.40	-0.30	-0.90	-1.70
Ini Zero Avg	0.13	5.52	0.63	0.05
Ini Span Avg	12.07	117.46	11.91	120.26
Run Avg	8.69	73.23	7.42	78.25
Co	0.13	6.13	0.38	0.03
Cm	12.11	117.03	11.81	118.09
Correct Avg	8.60	69.82	7.41	76.46

Test Run 3 Begin. STRATA Version 2.01
Operator: RMC Environmental, Inc.
Plant Name: WMI-Austin Gas to Energy
Location: Engines 1-4

Begin calculating run averages

		O2-1 %	NOx-1 ppm	O2-2 %	NOx-2 ppm
12/7/2009	12:21:02	8.367	72.03	7.413	78.52
12/7/2009	12:22:02	8.491	72.55	7.399	79.45
12/7/2009	12:23:03	8.573	71.9	7.424	79.14
12/7/2009	12:24:03	8.577	71.38	7.435	78.96
12/7/2009	12:25:03	8.575	71.77	7.434	78.89
12/7/2009	12:26:04	8.586	72.3	7.436	78.1
12/7/2009	12:27:02	8.774	73.32	7.398	78.28
12/7/2009	12:28:02	8.742	73.82	7.431	79.15
12/7/2009	12:29:02	8.595	72.66	7.42	79.26
12/7/2009	12:30:03	8.567	73.3	7.425	78.9
12/7/2009	12:31:03	8.56	72.22	7.429	78.17
12/7/2009	12:32:03	8.558	72.51	7.433	78.22
12/7/2009	12:33:04	8.549	72.54	7.422	77.81
12/7/2009	12:34:04	8.572	72.53	7.432	77.66
12/7/2009	12:35:02	8.573	72.2	7.435	77.5
12/7/2009	12:36:02	8.599	72.04	7.435	77.64
12/7/2009	12:37:03	8.592	71.31	7.436	76.9
12/7/2009	12:38:03	8.69	71.99	7.434	76.94
12/7/2009	12:39:03	9.066	71.14	7.438	77.01
12/7/2009	12:40:03	9.161	71.49	7.435	76.62
12/7/2009	12:41:02	9.137	72.17	7.434	78.78
12/7/2009	12:42:02	9.022	72.52	7.435	80.2
12/7/2009	12:43:03	8.731	72.59	7.436	79.72
12/7/2009	12:44:03	8.536	72.96	7.434	79.88
12/7/2009	12:45:03	8.5	73.52	7.435	79.03
12/7/2009	12:46:03	8.492	73.19	7.435	79.47
12/7/2009	12:47:04	8.492	73.55	7.443	79.86
12/7/2009	12:48:02	8.481	72.77	7.434	78.96
12/7/2009	12:49:02	8.483	73.01	7.422	78.93
12/7/2009	12:50:02	8.492	72.94	7.421	77.75
12/7/2009	12:51:03	8.487	73.08	7.434	77.32
12/7/2009	12:52:03	8.496	73.47	7.395	76.93
12/7/2009	12:53:03	8.487	72.67	7.434	76.86
12/7/2009	12:54:03	8.492	72.79	7.388	76.89
12/7/2009	12:55:03	8.498	72.89	7.422	77.74
12/7/2009	12:56:04	8.507	73.05	7.434	76.72
12/7/2009	12:57:02	8.496	74.42	7.422	79.52
12/7/2009	12:58:02	8.483	74.41	7.428	80.34
12/7/2009	12:59:02	8.485	75.56	7.432	79.87
12/7/2009	13:00:03	8.485	75.18	7.434	79.27

12/7/2009	13:01:03	8.486	73.24	7.433	79.74
12/7/2009	13:02:03	8.474	73.06	7.434	79.4
12/7/2009	13:03:04	8.492	74.34	7.436	79.25
12/7/2009	13:04:04	8.483	73.7	7.425	78.64
12/7/2009	13:05:02	8.475	74.35	7.413	78.37
12/7/2009	13:06:02	8.478	73.16	7.412	78.29
12/7/2009	13:07:03	8.481	72.87	7.424	78.2
12/7/2009	13:08:03	8.462	72.99	7.396	78.17
12/7/2009	13:09:03	8.471	73.53	7.422	77.98
12/7/2009	13:10:03	8.467	74.26	7.434	80.13
12/7/2009	13:11:04	8.471	73.26	7.419	79.75
12/7/2009	13:12:02	8.451	72.2	7.433	79.48
12/7/2009	13:13:02	8.454	72.72	7.433	79.53
12/7/2009	13:14:03	8.459	72.78	7.436	78.9
12/7/2009	13:15:03	8.443	73.06	7.434	78.5
12/7/2009	13:16:03	8.441	73.23	7.421	78.36
12/7/2009	13:17:03	8.444	73.23	7.409	77.95
12/7/2009	13:18:04	8.455	74.98	7.421	78.21
12/7/2009	13:19:04	8.479	73.15	7.432	77.5
12/7/2009	13:20:02	8.451	71.67	7.41	77.12
Average of Test Run		O2-1	NOx-1	O2-2	NOx-2
		%	ppm	%	ppm
12/7/2009	13:20:02	8.556	72.96	7.426	78.51

Test Run 3 End

Final System Bias Check for Run 3 . STRATA Version 2.01

Operator:	RMC Environmental, Inc.	
Plant Name:	WMI-Austin Gas to Energy	
Location:	Engines 1-4	
	Reference Cylinder Numbers	
	Zero	Span
O2-1	SG9150522	CC14014
NOx-1	CC14014	SG9150522
O2-2	SG9150522	CC14014
NOx-2	CC14014	SG9150522

Date/Time	12/7/2009	13:22:55 PASSED		
Analyte	O2-1	NOx-1	O2-2	NOx-2
Units	%	ppm	%	ppm
Zero Ref Cyl	0.00	0.00	0.00	0.00
Zero Cal	0.14	3.14	0.04	0.11
Zero Avg	0.12	7.62	0.13	0.56
Zero Bias%	0.10	1.80	0.40	0.20
Zero Drift%	-0.10	0.40	0.00	0.20
Span Ref Cyl	12.04	115.40	12.04	115.40
Span Cal	12.04	115.00	12.22	115.16
Span Avg	11.99	115.57	11.72	113.96
Span Bias%	0.20	0.20	2.40	0.50
Span Drift%	-0.80	-0.40	0.00	-0.80
Ini Zero Avg	0.14	6.74	0.13	0.01
Ini Span Avg	12.16	116.61	11.72	115.91
Run Avg	8.56	72.96	7.43	78.51
Co	0.13	7.18	0.13	0.28
Cm	12.08	116.09	11.72	114.94
Correct Avg	8.49	69.70	7.58	78.74

Calibration Error Test at Run 4 . STRATA Version 2.01

Operator:	RMC Environmental, Inc.
Plant Name:	WMI-Austin Gas to Energy
Location:	Engines 1-4

Reference Cylinder Numbers

	Zero	Low-range	Mid-range	High-range
O2-1	SG9150522		CC14014	CC147760
NOx-1	CC14014		SG9150522	CC208805
O2-2	SG9150522		CC14014	CC147760
NOx-2	CC14014		SG9150522	CC208805

Date/Time	12/8/2009	7:36:06 PASSED		
Analyte	O2-1	NOx-1	O2-2	NOx-2
Units	%	ppm	%	ppm
Zero Ref Cyl	0.00	0.00	0.00	0.00
Zero Avg	0.21	3.64	0.22	0.64
Zero Error%	1.00	1.50	1.10	0.30
Low Ref Cyl				
Low Avg				
Low Error%				
Mid Ref Cyl	12.04	115.40	12.04	115.40
Mid Avg	11.95	113.36	12.06	117.41
Mid Error%	0.50	0.80	0.10	0.80
High Ref Cyl	20.85	262.60	20.85	262.60
High Avg	20.58	262.41	20.60	264.42
High Error%	1.30	0.10	1.20	0.70

Initial System Bias Check for Run 4 . STRATA Version 2.01

Operator:	RMC Environmental, Inc.	
Plant Name:	WMI-Austin Gas to Energy	
Location:	Engines 1-4	
	Reference Cylinder Numbers	
	Zero	Span
O2-1	SG9150522	CC14014
NOx-1	CC14014	CC208805
O2-2	SG9150522	CC14014
NOx-2	CC14014	CC208805

Date/Time	12/8/2009	7:39:50 PASSED		
Analyte	O2-1	NOx-1	O2-2	NOx-2
Units	%	ppm	%	ppm
Zero Ref Cyl	0.00	0.00	0.00	0.00
Zero Cal	0.21	3.64	0.22	0.64
Zero Avg	0.19	7.15	0.03	0.05
Zero Bias%	0.10	1.40	0.90	0.20
Zero Drift%				
Span Ref Cyl	12.04	262.60	12.04	262.60
Span Cal	11.95	262.41	12.06	264.42
Span Avg	12.03	264.48	12.28	265.73
Span Bias%	0.40	0.80	1.00	0.50
Span Drift%				

Test Run 4 Begin. STRATA Version 2.01
Operator: RMC Environmental, Inc.
Plant Name: WMI-Austin Gas to Energy
Location: Engines 1-4

		O2-1 %	NOx-1 ppm	O2-2 %	NOx-2 ppm
Begin calculating run averages					
12/8/2009	9:31:01	8.143	73.75	7.523	89.06
12/8/2009	9:32:02	8.135	72.07	7.502	87.58
12/8/2009	9:33:02	8.152	73.4	7.515	90.32
12/8/2009	9:34:02	8.16	73.15	7.519	89.8
12/8/2009	9:35:03	8.154	72.78	7.462	88.56
12/8/2009	9:36:03	8.169	72.73	7.524	87.9
12/8/2009	9:37:03	8.179	70.99	7.516	89.31
12/8/2009	9:38:01	8.16	69.83	7.53	88.93
12/8/2009	9:39:02	8.163	70.18	7.533	90.61
12/8/2009	9:40:02	8.174	70.74	7.532	91.12
12/8/2009	9:41:02	8.174	70.23	7.532	90.42
12/8/2009	9:42:02	8.155	69.73	7.503	90.43
12/8/2009	9:43:03	8.148	70.25	7.529	91.74
12/8/2009	9:44:03	8.141	69.68	7.532	91.7
12/8/2009	9:45:03	8.114	69.53	7.529	89.9
12/8/2009	9:46:01	8.109	70.19	7.502	88.27
12/8/2009	9:47:02	8.12	69.42	7.469	88.19
12/8/2009	9:48:02	8.085	68.87	7.464	90.94
12/8/2009	9:49:02	8.093	68.97	7.502	92.35
12/8/2009	9:50:02	8.103	69.35	7.516	93.96
Begin Traverse					
12/8/2009	9:51:03	8.106	69.29	7.52	93.92
12/8/2009	9:52:03	8.114	69.96	7.485	93.19
12/8/2009	9:53:03	8.112	70.03	7.513	92.88
12/8/2009	9:54:01	8.106	69.6	7.516	94.08
12/8/2009	9:55:02	8.1	69.56	7.495	96.92
12/8/2009	9:56:02	8.105	68.93	7.534	96.22
12/8/2009	9:57:02	8.091	69.22	7.437	95.84
12/8/2009	9:58:02	8.113	69.55	7.492	98.16
12/8/2009	9:59:03	8.13	70.23	7.519	95.77
12/8/2009	10:00:03	8.132	69.55	7.531	96.72
12/8/2009	10:01:01	8.094	68.13	7.519	95.48
12/8/2009	10:02:01	8.104	69.14	7.536	95.98
12/8/2009	10:03:02	8.106	69.46	7.535	91.91
12/8/2009	10:04:02	8.128	69.47	7.462	87.15
12/8/2009	10:05:02	8.106	69.79	7.451	87.98
12/8/2009	10:06:02	8.09	69.72	7.473	88.74
12/8/2009	10:07:03	8.119	70.27	7.456	89.56
12/8/2009	10:08:03	8.126	69.72	7.443	87.56
12/8/2009	10:09:01	8.12	69.8	7.466	91.31

12/8/2009	10:10:01	8.126	70.04	7.462	90.36
Begin Traverse					
12/8/2009	10:11:02	8.108	70	7.459	91.73
12/8/2009	10:12:02	8.119	69.97	7.498	91.84
12/8/2009	10:13:02	8.072	69.21	7.439	90.09
12/8/2009	10:14:03	8.079	70.01	7.471	90.2
12/8/2009	10:15:03	8.119	70.72	7.525	88.65
12/8/2009	10:16:01	8.12	70.37	7.49	89.98
12/8/2009	10:17:01	8.136	70.19	7.533	89.65
12/8/2009	10:18:02	8.128	69.07	7.509	89.74
12/8/2009	10:19:02	8.123	69.82	7.442	90.03
12/8/2009	10:20:02	8.127	69.18	7.471	89.98
12/8/2009	10:21:02	8.105	68.88	7.48	91.1
12/8/2009	10:22:02	8.123	69.34	7.519	91.77
12/8/2009	10:23:03	8.129	69.25	7.472	92.3
12/8/2009	10:24:01	8.131	69.52	7.532	91.52
12/8/2009	10:25:01	8.145	69.43	7.532	91.44
12/8/2009	10:26:02	8.134	68.7	7.498	90.61
12/8/2009	10:27:02	8.094	70.55	7.522	89.19
12/8/2009	10:28:02	8.087	76.3	7.519	91.31
12/8/2009	10:29:02	8.099	71.26	7.53	87.84
12/8/2009	10:30:03	8.113	69.93	7.471	84.5
Average of Test Run		O2-1	NOx-1	O2-2	NOx-2
		%	ppm	%	ppm
12/8/2009	10:30:03	8.122	70.15	7.5	91.07
Test Run 4 End					

Final System Bias Check for Run 4 . STRATA Version 2.01

Operator:	RMC Environmental, Inc.	
Plant Name:	WMI-Austin Gas to Energy	
Location:	Engines 1-4	
	Reference Cylinder Numbers	
	Zero	Span
O2-1	SG9150522	CC14014
NOx-1	CC14014	CC208805
O2-2	SG9150522	CC14014
NOx-2	CC14014	CC208805

Date/Time	12/8/2009	10:33:13 PASSED		
Analyte	O2-1	NOx-1	O2-2	NOx-2
Units	%	ppm	%	ppm
Zero Ref Cyl	0.00	0.00	0.00	0.00
Zero Cal	0.21	3.64	0.22	0.64
Zero Avg	0.07	7.73	0.03	1.04
Zero Bias%	0.70	1.60	0.90	0.20
Zero Drift%	-0.50	0.20	0.00	0.40
Span Ref Cyl	12.04	262.60	12.04	262.60
Span Cal	11.95	262.41	12.06	264.42
Span Avg	11.86	263.20	11.72	261.53
Span Bias%	0.40	0.30	1.60	1.20
Span Drift%	-0.80	-0.50	-2.70	-1.70
Ini Zero Avg	0.19	7.15	0.03	0.05
Ini Span Avg	12.03	264.48	12.28	265.73
Run Avg	8.12	70.15	7.50	91.07
Co	0.13	7.44	0.03	0.54
Cm	11.95	263.84	12.00	263.63
Correct Avg	8.14	64.23	7.51	90.36

Test Run 5 Begin. STRATA Version 2.01
Operator: RMC Environmental, Inc.
Plant Name: WMI-Austin Gas to Energy
Location: Engines 1-4

Begin calculating run averages

		O2-1 %	NOx-1 ppm	O2-2 %	NOx-2 ppm
12/8/2009	10:36:03	7.996	68.19	7.497	85.63
12/8/2009	10:37:04	7.982	68.5	7.514	88.75
12/8/2009	10:38:04	7.974	67.61	7.514	88.97
12/8/2009	10:39:04	7.978	68.17	7.53	88.6
12/8/2009	10:40:05	7.983	68.92	7.509	89.83
12/8/2009	10:41:05	7.984	68.9	7.49	90.66
12/8/2009	10:42:05	7.989	69.06	7.435	90.18
12/8/2009	10:43:03	7.989	69.12	7.439	92.8
12/8/2009	10:44:04	7.989	68.75	7.444	88.56
12/8/2009	10:45:04	7.984	69.19	7.435	88.42
12/8/2009	10:46:04	7.976	68.58	7.433	88.09
12/8/2009	10:47:04	7.986	69.74	7.434	86.82
12/8/2009	10:48:05	7.997	69.29	7.435	85.6
12/8/2009	10:49:05	7.981	69.22	7.434	85.13
12/8/2009	10:50:05	7.976	69.48	7.432	86.05
12/8/2009	10:51:03	7.962	70.47	7.457	84.66
12/8/2009	10:52:04	7.982	69.17	7.433	86.73
12/8/2009	10:53:04	7.949	71.17	7.459	86.85
12/8/2009	10:54:04	7.981	70.99	7.432	82.42
12/8/2009	10:55:04	7.968	69.25	7.434	85.38
12/8/2009	10:56:05	7.966	69.8	7.432	86.97
12/8/2009	10:57:05	7.965	70.21	7.433	89.87
12/8/2009	10:58:03	7.952	71.01	7.435	91.42
12/8/2009	10:59:04	7.944	71.5	7.435	90.21
12/8/2009	11:00:04	7.94	70.8	7.433	90.4
12/8/2009	11:01:04	7.974	72.29	7.433	90.38
12/8/2009	11:02:04	7.964	72.1	7.434	90.34
12/8/2009	11:03:05	7.929	71.7	7.434	89.42
12/8/2009	11:04:05	7.932	72.56	7.434	91.88
12/8/2009	11:05:05	7.934	71.79	7.433	92.23
12/8/2009	11:06:03	7.94	71.8	7.432	92.21
12/8/2009	11:07:04	7.937	71.93	7.433	94.14
12/8/2009	11:08:04	7.933	71.34	7.435	92.22
12/8/2009	11:09:04	7.923	71.1	7.433	93.58
12/8/2009	11:10:04	7.932	71.7	7.433	93.93
12/8/2009	11:11:05	7.934	71.62	7.434	94.2
12/8/2009	11:12:05	7.915	71.08	7.433	92.91
12/8/2009	11:13:05	7.935	71.61	7.432	91.15
12/8/2009	11:14:03	7.937	72.33	7.432	89.95
12/8/2009	11:15:04	7.941	72.7	7.433	87.43

12/8/2009	11:16:04	7.93	73.46	7.433	89.04
12/8/2009	11:17:05	7.924	74.51	7.432	86.49
12/8/2009	11:18:05	7.926	74.85	7.432	86.51
12/8/2009	11:19:05	7.934	73.45	7.433	87.44
12/8/2009	11:20:03	7.927	71.5	7.433	87.79
12/8/2009	11:21:04	7.956	71.6	7.435	86.37
12/8/2009	11:22:04	7.94	71.58	7.43	84.97
12/8/2009	11:23:04	7.936	72.69	7.415	85.91
12/8/2009	11:24:04	7.986	73.28	7.416	85.46
12/8/2009	11:25:05	7.98	73.33	7.433	85.3
12/8/2009	11:26:05	7.977	74.73	7.437	87.42
12/8/2009	11:27:05	7.946	72.61	7.431	87.35
12/8/2009	11:28:03	7.953	73.48	7.432	87.25
12/8/2009	11:29:04	7.952	72.36	7.433	87.08
12/8/2009	11:30:04	8.291	72.41	7.433	87.56
12/8/2009	11:31:04	8.023	71.7	7.431	87.47
12/8/2009	11:32:04	8.25	72.09	7.431	86.9
12/8/2009	11:33:05	8.456	72.63	7.432	87.3
12/8/2009	11:34:05	8.371	71.71	7.433	86.63
12/8/2009	11:35:05	8.083	71.39	7.431	86.45
Average of Test Run		O2-1	NOx-1	O2-2	NOx-2
		%	ppm	%	ppm
12/8/2009	11:35:05	7.986	71.17	7.441	88.52

Test Run 5 End

Final System Bias Check for Run 5 . STRATA Version 2.01

Operator:	RMC Environmental, Inc.
Plant Name:	WMI-Austin Gas to Energy
Location:	Engines 1-4

Reference Cylinder Numbers

	Zero	Span
O2-1	SG9150522	CC14014
NOx-1	CC14014	CC208805
O2-2	SG9150522	CC14014
NOx-2	CC14014	CC208805

Date/Time	12/8/2009	11:38:14 PASSED		
Analyte	O2-1	NOx-1	O2-2	NOx-2
Units	%	ppm	%	ppm
Zero Ref Cyl	0.00	0.00	0.00	0.00
Zero Cal	0.21	3.64	0.22	0.64
Zero Avg	0.04	9.02	0.05	0.58
Zero Bias%	0.80	2.10	0.80	0.00
Zero Drift%	-0.20	0.50	0.10	-0.20
Span Ref Cyl	12.04	262.60	12.04	262.60
Span Cal	11.95	262.41	12.06	264.42
Span Avg	11.81	265.97	11.71	260.81
Span Bias%	0.70	1.40	1.70	1.40
Span Drift%	-0.30	1.10	0.00	-0.30
Ini Zero Avg	0.07	7.73	0.03	1.04
Ini Span Avg	11.86	263.20	11.72	261.53
Run Avg	7.99	71.17	7.44	88.52
Co	0.05	8.37	0.04	0.81
Cm	11.83	264.58	11.72	261.17
Correct Avg	8.11	64.36	7.63	88.47

Test Run 6 Begin. STRATA Version 2.01
Operator: RMC Environmental, Inc.
Plant Name: WMI-Austin Gas to Energy
Location: Engines 1-4

Begin calculating run averages

		O2-1 %	NOx-1 ppm	O2-2 %	NOx-2 ppm
12/8/2009	11:43:17	7.939	71.74	7.465	76.13
12/8/2009	11:44:17	7.94	71.44	7.431	74.84
12/8/2009	11:45:17	7.964	72.83	7.431	77.18
12/8/2009	11:46:17	7.948	72.77	7.468	80.02
12/8/2009	11:47:17	7.955	72.73	7.478	78.96
12/8/2009	11:48:18	7.943	71.71	7.433	78.46
12/8/2009	11:49:18	7.928	71.48	7.436	77.81
12/8/2009	11:50:18	7.962	72.22	7.441	78.42
12/8/2009	11:51:19	7.946	70.04	7.431	77.3
12/8/2009	11:52:19	7.941	73.18	7.431	78.4
12/8/2009	11:53:17	7.921	72.79	7.436	79.46
12/8/2009	11:54:17	7.923	72.96	7.522	78.14
12/8/2009	11:55:18	7.932	72.74	7.519	79.45
12/8/2009	11:56:18	7.931	71.41	7.525	79.45
12/8/2009	11:57:18	7.918	71.23	7.525	78.77
12/8/2009	11:58:19	7.933	71.47	7.523	78.76
12/8/2009	11:59:17	7.931	71.25	7.526	78.69
12/8/2009	12:00:17	7.911	72.93	7.515	78.13
12/8/2009	12:01:17	7.922	71.67	7.459	75.52
12/8/2009	12:02:18	7.904	71.3	7.434	74.66
12/8/2009	12:03:19	7.921	69.18	7.44	74.58
12/8/2009	12:04:17	7.933	68.53	7.445	74.3
12/8/2009	12:05:17	7.899	66.74	7.457	73.63
12/8/2009	12:06:17	7.893	68.74	7.436	73.63
12/8/2009	12:07:18	7.897	68.21	7.435	71.44
12/8/2009	12:08:18	7.917	68.46	7.436	72.02
12/8/2009	12:09:18	7.911	67.53	7.438	73.65
12/8/2009	12:10:18	7.913	68.23	7.446	73.28
12/8/2009	12:11:19	7.911	68.36	7.445	74.14
12/8/2009	12:12:17	7.909	68.67	7.435	72.33
12/8/2009	12:13:17	7.915	68.48	7.436	71.79
12/8/2009	12:14:17	7.902	68.69	7.452	73.24
12/8/2009	12:15:17	7.911	69.2	7.442	72.8
12/8/2009	12:16:18	7.937	70.16	7.455	74.8
12/8/2009	12:17:18	7.94	69.64	7.444	74.91
12/8/2009	12:18:18	7.921	69.11	7.437	75.17
12/8/2009	12:19:18	7.892	70.42	7.436	75.71
12/8/2009	12:20:19	7.89	69.8	7.436	76.17
12/8/2009	12:21:17	7.912	71.49	7.501	76.28
12/8/2009	12:22:17	7.903	70.38	7.443	74.6

12/8/2009	12:23:18	7.9	70.39	7.436	75.24
12/8/2009	12:24:18	7.915	70.41	7.521	74.68
12/8/2009	12:25:18	7.919	73.55	7.524	73.91
12/8/2009	12:26:19	7.909	73.27	7.53	74.43
12/8/2009	12:27:17	7.904	71.77	7.527	73.01
12/8/2009	12:28:17	7.894	71.82	7.524	71.94
12/8/2009	12:29:17	7.899	69.79	7.487	73.09
12/8/2009	12:30:18	7.918	68.49	7.531	74.19
12/8/2009	12:31:18	7.931	67.92	7.53	74.08
12/8/2009	12:32:18	7.922	66.04	7.53	75.08
12/8/2009	12:33:19	7.892	66.75	7.484	76.6
12/8/2009	12:34:17	7.883	68.38	7.436	75.14
12/8/2009	12:35:17	7.877	68.68	7.458	74.69
12/8/2009	12:36:17	7.878	69.29	7.517	75.81
12/8/2009	12:37:18	7.895	68.78	7.531	79.67
12/8/2009	12:38:18	7.895	70.88	7.49	81.64
12/8/2009	12:39:18	7.894	74.53	7.498	81.69
12/8/2009	12:40:19	7.883	73.8	7.437	80.35
12/8/2009	12:41:17	7.879	72.68	7.437	80.27
12/8/2009	12:42:17	7.868	71.23	7.51	79.92
Average of Test Run		O2-1	NOx-1	O2-2	NOx-2
		%	ppm	%	ppm
12/8/2009	12:42:18	7.915	70.47	7.471	76.04

Test Run 6 End

Final System Bias Check for Run 6 . STRATA Version 2.01

Operator:	RMC Environmental, Inc.	
Plant Name:	WMI-Austin Gas to Energy	
Location:	Engines 1-4	
	Reference Cylinder Numbers	
	Zero	Span
O2-1	SG9150522	CC14014
NOx-1	CC14014	CC208805
O2-2	SG9150522	CC14014
NOx-2	CC14014	CC208805

Date/Time	12/8/2009	12:47:03 PASSED		
Analyte	O2-1	NOx-1	O2-2	NOx-2
Units	%	ppm	%	ppm
Zero Ref Cyl	0.00	0.00	0.00	0.00
Zero Cal	0.21	3.64	0.22	0.64
Zero Avg	0.04	8.30	0.03	0.04
Zero Bias%	0.80	1.90	0.90	0.20
Zero Drift%	0.00	-0.30	-0.10	-0.20
Span Ref Cyl	12.04	262.60	12.04	262.60
Span Cal	11.95	262.41	12.06	264.42
Span Avg	11.78	258.69	11.82	256.19
Span Bias%	0.80	1.50	1.20	3.30
Span Drift%	-0.10	-2.90	0.50	-1.80
Ini Zero Avg	0.04	9.02	0.05	0.58
Ini Span Avg	11.81	265.97	11.71	260.81
Run Avg	7.92	70.47	7.47	76.04
Co	0.04	8.66	0.04	0.31
Cm	11.79	262.33	11.77	258.50
Correct Avg	8.07	63.99	7.63	77.02

APPENDIX C. TEST QA/ QC FORMS

Calibration Gas Certificates of Analysis

Meterbox Calibrations

Pitot Calibrations

EXAMPLE CALCULATIONS
Instrumental Methods

Company: Waste Management of Texas
Source: Eng 1 & 2, 3 & 4
Test Location: Plant 1
RMCEInc Project #: 2009-16797

Normal Load: HIGH LOAD
Run: 1
Start Time: 12/7/2009 10:00
End Time: 12/7/2009 11:00
Run Duration (Min.) : 1:00

Emission Rate (lbs/mmBtu)

NO_xlbs/mmbtu = F-Factor * Conv-Factor * NOxppmd * 20% O2 / (20.9% O2 -O2%d)

NO_xlbs/mmbtu = 70.77 * 9486 * 0.0000001194 * 20.9 / (20.9- 8.62)

NO_xlbs/mmbtu = 0.136

Emission Rate (ppm@15% O_2)

NOx ppm@15% O_2 = NOx ppmd * 5.9 / (20.9% O2 -O2%d)

NOx ppm@15% O_2 = 70.77 * 5.9 / (20.9 - 8.62)

NOx ppm@15% O_2 = 34.00

Emission Rate (lbs/Hr)

NO_xlbs/Hr = DSCFM * Conv-Factor * NOxppmd * 60

NO_xlbs/Hr = 4285 * 70.77 * 0.0000001194 * 60

NO_xlbs/Hr = 2.17

Emission Rate (lbs/Mw-Hr)

NO_xlbs/Mw-Hr = lb/ Hr / Mw

NO_xlbs/Mw-Hr = 2.17 / 1.6 Mw 1.6 Mw is the set point for the engines and the Mw fluctuate

NO_xlbs/Mw-Hr = 1.36

CEM Traverse Points

Company: Waste Management of Texas **Date:** 11/17/2009

Sampling Location: Eng 1 & 2, 3 & 4 - Plant 1 **Project #:** 2009-16797

Stack Dia. *(in)*	Nipple *(in)*
16	4

Stratification	N	Select Short Traverse	Y
Wet Scrubber	N	*SHORT Traverse not allowed*	
Two Gas Streams	N		
Dia. < 2.4 Meters	Y		

STANDARD TRAVERSE MEASUREMENTS

Traverse Points	*Requirement Dist. from Inside Wall*	Length (ft-in)
1	*16.7%*	0' 6-3/4"
2	*50.0%*	1' 0"
3	*83.3%*	1' 5-1/4"

SHORT TRAVERSE MEASUREMENTS

Traverse Points	*Requirement Dist. from Inside Wall*	Length (ft-in)
1	*0.4 m*	
2	*1.2 m*	
3	*2.0 m*	

STANDARD Traverse Used

Distance of Traverse Points From Inside Wall

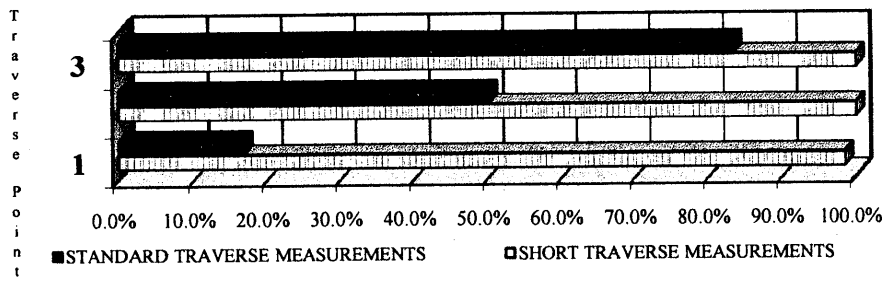

PreTest Meterbox Audit

Plant: Waste Management of Texas
Location: Austin Gas Plant

Test Date: 12/9/2009
Auditor: AM
Project #: 2009-16797

Meterbox I.D.:	RMC002	**Level Manometer:**	Yes
Gamma:	0.979	**Zero Manometer:**	Yes
Delta H@	1.770	**Barometric Pressure:**	29.85

	Audit Time (Min)	Dry Gas Meter Reading (Ft^3)	Dry Gas Meter Temperature (^oF)
Initial Readings =	0.0	908.013	70
Final Readings =	5.0	911.940	74

Run Time (Minutes) **Theta** =	5
Gas Volume Sampled V_m =	3.9270
Average T_m =	72.0

	Audit Gamma Limits
Lower Gamma Limit **LGL**=	*0.96 * Y =* 0.940
Upper Gamma Limit **UGL**=	*1.04 * Y =* 1.018

Audit Gamma Y_c =	**0.9597**
Meter Box Audit =	**Passed**

Ideal Sampling Rate = 0.75

$$Y_c = (Theta / V_m) * [\{ (29.92 / (460 + 68) * 0.75^2) * (T_m + 460) \} / P_{bar}]^{0.5}$$

Passed = $LGL < Y_c < UGL$

Failed = $LGL > Y_c$ *or* $Y_c > UGL$

Audit Performed By: AMD on site 1st Run

RMC Environmental, Inc.

S-TYPE PITOT TUBE INSPECTION

Project Number	2009-16797		
Pitot Tube Number	M2-36-2		
Level	Y	(Y/N)	PASS
Obstructions	N	(Y/N)	PASS
Damaged	N	(Y/N)	PASS
Type of material	SS		
-10 < alpha1 < +10	0.5	Degrees	PASS
-10 < alpha2 < +10	0.5	Degrees	PASS
-5 < Beta1 < +5	0.0	Degrees	PASS
-5 < Beta2 < +5	0.0	Degrees	PASS
z or Gamma	0.0	Degrees	
w or Theta	0.5	Degrees	
A	0.795	Inches	
{z = A Tan (Gamma)} < 0.125	0.004	Inches	PASS
{w = A Tan (Theta)} < 0.03125	0.008	Inches	PASS
$0.1875 < D_t < 0.375$	0.375	Inches	PASS
$1.05\ D_t < P_a < 1.5\ D_t$	0.395	Inches	PASS
$1.05\ D_t < P_b < 1.5\ D_t$	0.394	Inches	PASS
$\lvert P_a - P_b \rvert < 0.0625$	0.001	Inches	PASS
Distance T/C set back > 2.0	2.440	Inches	PASS

alpha1 & alpha 2	are the angles of deflection that faces of the pitot tube are off from the perpendicular line of the traverse axis.
Beta1 & Beta2	are the angles of deflection that faces of the pitot tube from the line parallel to the longitudinal tube axis.
Gamma	is the angle between the line between the two pitot tips and the theoretical level line between the tips.
Theta	is the angle between the two center lines of the pitot faces.
A	is the distance between the two pitot tips.
z	is the distance between the two lengths of the pitot tips.
w	is the distance between the two center lines of each of the pitot tubes.
D_t	is the outside diameter of the tubing used.
P_a & P_b	is the distance between the pitot tube face and the longitudinal tube axis.

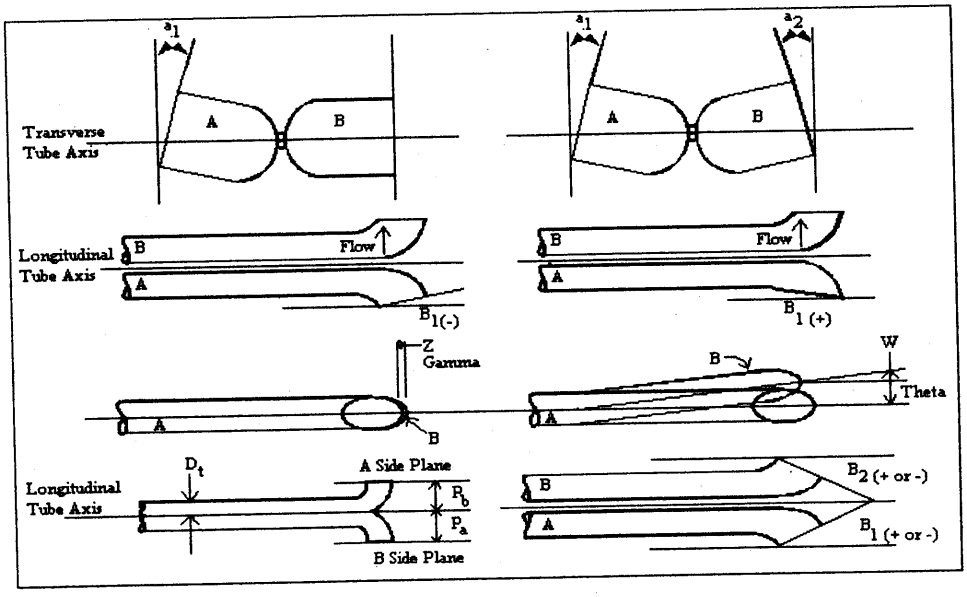

COMMENTS: On site Verification

I certify that this pitot tube meets or exceeds all specifications, criteria and/ or applicable design features and is hereby assigned a pitot tube calibration factor of 0.84.

Signature: [signature]

Date: 12/7/09

RMC ENvironmental, Inc.

NO2-NO CONVERSION EFFICIENCY

RMCEInc-Air Monitoring Division

Manufacture/ Model: TECO 42H
Serial Number: 42H-42739-267

Instrument Span: 250
Date Of Test: 12/9/2009

RESULTS	
Peak response recorded during converter efficiency test:	50.48 ppm
Response recorded at the end of the 30-minute test:	49.27 ppm
Percent decrease from the peak response:	2.40%
CONVERTER EFFICIENCY:	**97.60%**

SPECIFICATIONS (EPA METHOD 20): RESPONSE AT 30 MINUTES MUST NOT DECREASE BY MORE THAN 2% OF THE PEAK RESPONSE VALUE.

NO2-NO CONVERTER EFFICIENCY TEST PROCEDURES

RMCEInc-AMD followed the manufacturer's recommended set-up procedures contained in the analyzer manual. After the initial set-up procedures were completed, the electronics of the monitor were adjusted according to the manufacturer's guidelines. The monitor was then calibrated by flowing NO calibration gases into the instrument. A calibration gas was then diluted (1:1) with purified compressed air. The gas mixture was routed through a manifold into a Tedlar bag, which was previously leak tested and evacuated. This arrangement afforded sufficient volume to allow the sampling system to operate for the required 30 minutes. Immediately after the bag was filled, the manifold was connected to the sampling system. The system was turned on and the analyzer response was recorded on a data acquisition system. The one minute averages from the data acquisition system was analyzed for the peak response and the response at the end of the 30-minute sampling period.

NO2-NO CONVERSION EFFICIENCY

RMCEInc-Air Monitoring Division

Manufacture/ Model: TECO 42i-HL
Serial Number: 42iHL-ANSBPCC

Instrument Span: 250
Date Of Test: 12/07/09

RESULTS			
NOx Response:	44.37	Peak response recorded during converter efficiency test:	52.34 ppm
NO Response:	0.17	Response recorded at the end of the 30-minute test:	52.07 ppm
NO2 Response:	44.2	Percent decrease from the peak response:	0.52%
Converter Efficiency:	**100.00 %**	**Converter Efficiency:**	**99.48%**

SPECIFICATIONS (EPA METHOD 7E): RESPONSE AT 30 MINUTES MUST NOT DECREASE BY MORE THAN 2% OF THE PEAK RESPONSE VALUE.

NO2-NO CONVERTER EFFICIENCY TEST PROCEDURES

RMCEInc-AMD followed the manufacturer's recommended set-up procedures contained in the analyzer manual. After the initial set-up procedures were completed, the electronics of the monitor were adjusted according to the manufacturer's guidelines. The monitor was then calibrated by flowing NO calibration gases into the instrument. A calibration gas was then diluted (1:1) with purified compressed air. The gas mixture was routed through a manifold into a Tedlar bag, which was previously leak tested and evacuated. This arrangement afforded sufficient volume to allow the sampling system to operate for the required 30 minutes. Immediately after the bag was filled, the manifold was connected to the sampling system. The system was turned on and the analyzer response was recorded on a data acquisition system. The one minute averages from the data acquisition system was analyzed for the peak response and the response at the end of the 30-minute sampling period.

APPENDIX D. PROCESS DATA

PROCESS DATA

Company: Waste Management of Texas - Austin Gas Plant
Source: Engines 1 & 4

Engine 1

Start Time		% Load	KW	Fuel Flow	Fuel Flow	Heating value	Heat Input	Heat Input	Heat Rate	Air Flow	BTU	Tuning	Air/Fuel Ratio	Fuel Position	CH4 %	O2 %	CO2 %	N2 %	Engine #
			1600		SCFM at 50% methane	Btu/scf HHV	MMBtu/hr HHV	MMBtu/hr LHV	Btu/kWhr LHV										
						Calculated Data									*Gas Analysis/Sample*	*Gas Analysis*			
12/7/2009 10:00	Run 1	96.0	1618	608	576	479	17.49	15.75	9,732	4462	435	28.0	7.3	56	47.4	0.85	38.1	13.3	1
12/7/2009 10:15		97.0	1629	617	585	479	17.75	15.98	9,809	4478	435								1
12/7/2009 10:30		97.0	1632	601	570	479	17.29	15.56	9,537	4460	435								1
12/7/2009 10:45		97.0	1628	608	576	479	17.49	15.75	9,672	4385	435								1
	Average	96.8	1627	609	577	479	17.51	15.76	9,687	4446	435								
12/7/2009 11:10	Run 2	97.0	1628	594	568	484	17.25	15.53	9,541	4403	435	28.0	7.5	54	47.8	0.77	38.4	12.5	1
12/7/2009 11:25		97.0	1612	593	567	484	17.23	15.51	9,619	4451	435								1
12/7/2009 11:40		97.0	1626	589	564	484	17.11	15.40	9,472	4348	435								1
12/7/2009 11:55		98.0	1622	591	565	484	17.17	15.45	9,528	4306	435								1
	Average	97.3	1622	592	566	484	17.19	15.47	9,540	4377	435								
12/7/2009 12:20	Run 3	97.0	1608	585	563	487	17.11	15.40	9,577	4340	435	28.0	7.7	54	48.2	0.60	38.0	10.8	1
12/7/2009 12:35		97.0	1632	580	559	487	16.96	15.27	9,355	4357	435								1
12/7/2009 12:50		97.0	1615	578	557	487	16.90	15.22	9,421	4309	435								1
12/7/2009 13:05		98.0	1625	576	555	487	16.84	15.16	9,331	4337	435								1
	Average	97.3	1620	580	558	487	16.95	15.26	9,421	4336	435								

Engine 4

			1600 Max																
12/7/2009 10:00	Run 1	99.0	1654	621	588	487	18.16	16.35	9,884	4442	420	28.0	7.3	60	47.4	0.85	38.1	13.3	4
12/7/2009 10:15		97.0	1614	620	588	487	18.13	16.32	10,112	4416	420								4
12/7/2009 10:30		98.0	1647	633	600	487	18.51	16.66	10,117	4438	420								4
12/7/2009 10:45		98.0	1602	621	588	487	18.16	16.35	10,204	4518	420								4
	Average	98.0	1629	624	591	487	18.24	16.42	10,079	4454	420								
12/7/2009 11:10	Run 2	96.0	1641	619	592	484	17.98	16.19	9,864	4520	420	28.0	7.4	58	47.8	0.77	38.4	12.5	4
12/7/2009 11:25		97.0	1621	608	582	484	17.66	15.90	9,808	4483	420								4
12/7/2009 11:40		98.0	1624	615	588	484	17.86	16.08	9,903	4387	420								4
12/7/2009 11:55		97.0	1618	607	581	484	17.63	15.87	9,810	4375	420								4
	Average	97.0	1626	612	586	484	17.78	16.01	9,846	4441	420								
12/7/2009 12:20	Run 3	97.0	1647	606	584	487	17.72	15.95	9,686	4221	420	28.0	7.6	51	48.2	0.60	38.0	10.8	4
12/7/2009 12:35		97.0	1621	599	577	487	17.52	15.77	9,727	4225	420								4
12/7/2009 12:50		97.0	1624	597	575	487	17.46	15.72	9,677	4369	420								4
12/7/2009 13:05		98.0	1611	605	583	487	17.69	15.93	9,886	4374	420								4
	Average	97.3	1626	602	580	487	17.60	15.84	9,744	4395	428								

Calculated:

Heat Rate = mmBtu/Hr

$$\text{Heat Rate} = \frac{HHV_{air} * \text{Fuel Flow}}{1{,}000{,}000}$$

$$\text{Heat Rate} = \frac{546 * (1492*60)}{1{,}000{,}000}$$

Heat Rate = 17.49 mmBtu/Hr

PROCESS DATA

Company: Waste Management of Texas - Austin Gas Plant
Source: Engines 2 & 3

Engine 2						Calculated Data									Gas Analysis/Sample	Gas Analysis				
Start Time		% Load	KW	Fuel Flow	Fuel Flow	Heating value	Heat Input	Heat Input	Heat Rate	Air Flow	BTU	Tuning	Air/Fuel Ratio	Fuel Position	CH4 %	O2 %	CO2 %	N2 %	Engine #	
			1600		SCFM at 50% methane	Btu/scf HHV	MMBtu/hr HHV	MMBtu/hr LHV	Btu/kWhr LHV											
12/8/2009 9:30	Run 1	98.0	1628	576	590	518	17.90	16.11	9,898	4446	430	28.0	7.8	58	51.2	0.40	39.6	8.6	2	
12/8/2009 9:45		98.0	1644	577	591	518	17.93	16.14	9,818	4428	430								2	
12/8/2009 10:00		98.0	1630	578	592	518	17.96	16.17	9,920	4381	430								2	
12/8/2009 10:15		97.0	1715	575	589	518	17.87	16.09	9,379	4404	430								2	
	Average	97.8	1654	577	590	518	17.92	16.13	9,754	4415	430									
12/8/2009 10:35	Run 2	96.0	1619	574	588	518	17.84	16.06	9,918	4392	431	28.0	7.8	56	51.2	0.40	39.6	8.6	2	GC Stopped Working
12/8/2009 10:50		95.0	1638	571	584	518	17.74	15.97	9,752	4354	431								2	
12/8/2009 11:05		96.0	1634	570	583	518	17.71	15.95	9,759	4355	431								2	
12/8/2009 11:20		96.0	1617	569	582	518	17.68	15.92	9,844	4297	431								2	
	Average	95.8	1627	571	584	518	17.74	15.97	9,818	4350	431									
12/8/2009 11:42	Run 3	95.0	1611	570	583	518	17.71	15.95	9,898	4378	431	28.0	7.9	55	51.2	0.40	39.6	8.6	2	
12/8/2009 11:57		95.0	1630	566	579	518	17.59	15.83	9,714	4396	431								2	
12/8/2009 12:12		96.0	1631	574	588	518	17.84	16.06	9,845	4310	431								2	
12/8/2009 12:27		97.0	1648	573	587	518	17.81	16.03	9,727	4307	431								2	
	Average	95.8	1630	571	584	518	17.74	15.97	9,796	4348	431									
Engine 3			**1600 Max**																	
12/8/2009 9:30	Run 1	98.0	1632	570	540	518	17.71	15.95	9,771	4319	441	28.0	7.5	57	47.4	0.85	38.1	13.3	3	
12/8/2009 9:45		96.0	1617	576	546	518	17.90	16.11	9,965	4331	441								3	
12/8/2009 10:00		96.0	1627	573	543	518	17.81	16.03	9,852	4291	441								3	
12/8/2009 10:15		97.0	1609	577	547	518	17.93	16.14	10,032	4337	441								3	
	Average	96.0	1621	574	544	518	17.84	16.06	9,905	4320	441									
12/8/2009 10:35	Run 2	97.0	1625	573	548	484	16.64	14.98	9,221	4330	441	28.0	7.6	56	47.8	0.77	38.4	12.5	3	GC Stopped Working
12/8/2009 10:50		97.0	1657	571	546	484	16.59	14.93	9,011	4349	441								3	
12/8/2009 11:05		96.0	1609	569	544	484	16.53	14.88	9,247	4340	441								3	
12/8/2009 11:20		96.0	1619	572	547	484	16.62	14.96	9,239	4344	441								3	
	Average	96.5	1628	571	547	484	16.59	14.94	9,179	4341	441									
12/8/2009 11:42	Run 3	96.0	1616	569	548	487	16.64	14.98	9,269	4342	441	28.0	7.6	55	48.2	0.60	38.0	10.8	3	
12/8/2009 11:57		96.0	1624	571	550	487	16.70	15.03	9,256	4320	441								3	
12/8/2009 12:12		96.0	1617	572	551	487	16.73	15.06	9,312	4319	441								3	
12/8/2009 12:27		96.0	1615	570	549	487	16.67	15.00	9,291	4332	441								3	
	Average	96.0	1618	571	550	487	16.68	15.02	9,282	4351	436									

Calculated:

Heat Rate = mmBtu/Hr

$$\text{Heat Rate} = \frac{HHV_{ch4} * \text{Fuel Flow}}{1{,}000{,}000}$$

$$\text{Heat Rate} = \frac{546 * (1492*60)}{1{,}000{,}000}$$

Heat Rate = 17.90 mmBtu/Hr

8210 Mosley Rd.
Houston, TX 77075
713 943-9776 Telephone
713 943-3846 Facsimile

CORE LABORATORIES

RACHEL CHLEBOROWICZ
RMC ENVIRONMENTAL INC
9226 N 2ND STREET
MACHESNEY PARK IL 61115

Date Reported: 12/14/2009
Date Received: 12/14/2009
Austin

Analytical Report

Test	Result	Units	Method	Date	Analyst
Sample Number:	**193874-001**	**Sample ID:**	**Eng 1/4 (LFG # 2032)**		**Sample Rcvd:**
Sample Date:	**12/7/2009 12:00:00 P**	**Description:**			**12/14/2009**
			# 2032		
Ultimate Analysis					
Hydrogen	0.04	Mol %	ASTM D-1945	12/14/2009	JAT
Helium	< 0.05	Mol %			
Oxygen	0.63	Mol %	GPA 2261-95		
Nitrogen	13.02	Mol %			
Carbon Dioxide	37.58	Mol %			
Methane	48.67	Mol %			
Ethane	< 0.01	Mol %			
Propane	0.01	Mol %			
Isobutane	< 0.01	Mol %			
n-Butane	0.01	Mol %			
Isopentane	< 0.01	Mol %			
n-Pentane	0.01	Mol %			
Hexanes Plus	0.03	Mol %			
Total	100.00	Mol %			
Molar Mass Ratio	0.97508		GPA 2172-96		
Relative Density	0.97709				
Compressibility Factor	0.99727				
Gross Heating Value (Dry)	494.2	BTU/CF (Ideal			
Gross Heating Value (Dry)	495.5	BTU/CF (Real			
Net Heating Value	445.0	BTU/CF (Ideal			
Net Heating Value	446.2	BTU/CF (Real			
F-Factor @ 20C & 29.92in.	9579	dscf/mmBTU			
Pressure Base	14.696	psia			
Carbon	36.81	Wt %			
Hydrogen	6.98	Wt %			
Oxygen	43.30	Wt %			
Nitrogen	12.91	Wt %			
Sulfur	< 0.01	Wt %			

The analytical results, opinions or interpretations contained in this report are based upon information and material supplied by the client for whose exclusive and confidential use this report has been made. The analytical results, opinions or interpretations expressed represent the best judgment of Core Laboratories. Core Laboratories, however, makes no warranty or representation, express or implied, of any type, and expressly disclaims same as to the productivity, proper operations or profitableness of any oil, gas, coal, or other mineral, property, well or sand in connection with which such report is used or relied upon for any reason whatsoever. This report shall not be reproduced, in whole or in part, without the written approval of Core Laboratories.

8210 Mosley Rd.
Houston, TX 77075
713 943-9776 Telephone
713 943-3846 Facsimile

CORE LABORATORIES

RACHEL CHLEBOROWICZ
RMC ENVIRONMENTAL INC
9226 N 2ND STREET
MACHESNEY PARK IL 61115

Date Reported: 12/14/2009
Date Received: 12/14/2009

Analytical Report

Test	Result	Units	Method	Date	Analyst
Sample Number:	**193874-002**	**Sample ID:**	**Eng 2/3 (LFG # 1606)**		**Sample Rcvd:**
Sample Date:	**12/8/2009 11:00:00 A**	**Description:**			**12/14/2009**
			# 1606		
Ultimate Analysis					
Hydrogen	0.05	Mol %	ASTM D-1945	12/14/2009	JAT
Helium	< 0.05	Mol %			
Oxygen	0.37	Mol %	GPA 2261-95		
Nitrogen	10.11	Mol %			
Carbon Dioxide	38.53	Mol %			
Methane	50.93	Mol %			
Ethane	< 0.01	Mol %			
Propane	< 0.01	Mol %			
Isobutane	< 0.01	Mol %			
n-Butane	< 0.01	Mol %			
Isopentane	< 0.01	Mol %			
n-Pentane	< 0.01	Mol %			
Hexanes Plus	0.01	Mol %			
Total	100.00	Mol %			
Molar Mass Ratio	0.96979		GPA 2172-96		
Relative Density	0.97189				
Compressibility Factor	0.99716				
Gross Heating Value (Dry)	515.1	BTU/CF (Ideal			
Gross Heating Value (Dry)	516.5	BTU/CF (Real			
Net Heating Value	463.8	BTU/CF (Ideal			
Net Heating Value	465.1	BTU/CF (Real			
F-Factor @ 20C & 29.92in.	9518	dscf/mmBTU			
Pressure Base	14.696	psia			
Carbon	38.28	Wt %			
Hydrogen	7.32	Wt %			
Oxygen	44.32	Wt %			
Nitrogen	10.08	Wt %			
Sulfur	< 0.01	Wt %			

The analytical results, opinions or interpretations contained in this report are based upon information and material supplied by the client for whose exclusive and confidential use this report has been made. The analytical results, opinions or interpretations expressed represent the best judgment of Core Laboratories. Core Laboratories, however, makes no warranty or representation, express or implied, of any type, and expressly disclaims same as to the productivity, proper operations or profitableness of any oil, gas, coal, or other mineral, property, well or sand in connection with which such report is used or relied upon for any reason whatsoever. This report shall not be reproduced, in whole or in part, without the written approval of Core Laboratories.

8210 Mosley Rd.
Houston, TX 77075
713 943-9776 Telephone
713 943-3846 Facsimile

CORE LABORATORIES

RACHEL CHLEBOROWICZ
RMC ENVIRONMENTAL INC
9226 N 2ND STREET
MACHESNEY PARK IL 61115

Date Reported: 12/14/2009
Date Received: 12/14/2009

Analytical Report

Test	Result	Units	Method	Date	Analyst
Sample Number:	**193874-002**	**Sample ID:**	**Eng 2/3 (LFG # 1606)**		**Sample Rcvd:**
Sample Date:	**12/8/2009 11:00:00 A**	**Description:**	**# 1606**		**12/14/2009**

Approved By: M. Jean Waits
Supervising Chemist

The analytical results, opinions or interpretations contained in this report are based upon information and material supplied by the client for whose exclusive and confidential use this report has been made. The analytical results, opinions or interpretations expressed represent the best judgment of Core Laboratories. Core Laboratories, however, makes no warranty or representation, express or implied, of any type, and expressly disclaims same as to the productivity, proper operations or profitableness of any oil, gas, coal, or other mineral, property, well or sand in connection with which such report is used or relied upon for any reason whatsoever. This report shall not be reproduced, in whole or in part, without the written approval of Core Laboratories.

CORE LABORATORIES

No. 26312

CHAIN OF CUSTODY RECORD

Core Lab
RESERVOIR OPTIMIZATION
8210 Mosley Road
Houston, Texas 77075
Phone: 713-943-9776
Fax: 713-943-3846

CUSTOMER INFORMATION	PROJECT INFORMATION
COMPANY: RMC Environtal, Inc	PROJECT NAME/NUMBER: 2009 - 16797
SEND REPORT TO: 9226 N. 2nd	BILLING INFORMATION
ADDRESS: Machesney Park, IL 61115	BILL TO: RMC ENV, Inc
Attn: Rachel Chleborny	ADDRESS: PO Box 2131
RMCEC Airmonitoring.com	Atlantic Beach, NC 28512
PHONE: 815-378-6150	PHONE: 815-378-6150
FAX: 815-425-1102	FAX: 815-425-1102 PO NO.:

LAB JOB NO.

SAMPLE NO.	SAMPLE DESCRIPTION	SAMPLE DATE	SAMPLE TIME	SAMPLE MATRIX	CONTAINER	PRESERV.	NUMBER OF CONTAINERS	ANALYSIS / METHOD REQUEST: Lit/Prox w/ F-Factor	REMARKS / PRECAUTIONS
ENG 1/4	LFG #2032	12/7	1200	LFG	~~1606~~ 2032		1	✓	
ENG 2/3	" #1606	12/8	1100	LFG	~~2032~~ 1606		1	✓	

SAMPLER: R. Chleborny

SHIPMENT METHOD: Fed ex

AIRBILL NO.:

REQUIRED TURNAROUND:* ☐ SAME DAY ☐ 24 HOURS ☐ 48 HOURS ☐ 72 HOURS ☐ 5 DAYS ☐ 10 DAYS ☑ ROUTINE OTHER

1. RELINQUISHED BY:	DATE	2. RELINQUISHED BY:	DATE	3. RELINQUISHED BY:	DATE
SIGNATURE:	12/8/09	SIGNATURE:		SIGNATURE:	
PRINTED NAME/COMPANY: Rachel Chleborny - RMCEnv, Inc	TIME 1100	PRINTED NAME/COMPANY:	TIME	PRINTED NAME/COMPANY:	TIME
1. RECEIVED BY:	DATE	2. RECEIVED BY:	DATE	3. RECEIVED BY:	DATE
SIGNATURE:		SIGNATURE:		SIGNATURE:	
PRINTED NAME/COMPANY:	TIME	PRINTED NAME/COMPANY:	TIME	PRINTED NAME/COMPANY:	TIME

* RUSH TURNAROUND MAY REQUIRE SURCHARGE

ORIGINAL